F-5-55

APPROVED
STATE OF GEORGIA
MAR 15 1984
WATER QUALITY CONTROL SECTION
ENVIRONMENTAL PROTECTION DIVISION
By Carla E. Woodall

JACK C. DOZIER P.E.

DATUM EQUALS USC&GS MEAN SEA LEVEL PLUS 100.00 FT.

SCALE	WIEDEMAN AND SINGLETON	SHEET
AS SHOWN	ENGINEERS	1
DATE	ATLANTA GEORGIA	OF 39
JAN. 1984		

EPA PROJECT NO. C130409

CITY OF BRUNSWICK, GEORGIA
SEWERAGE SYSTEM IMPROVEMENTS

ACADEMY CREEK PLANT
PROJECT LOCATION MAP
PHASE II

GEORGIA REGISTERED JOHN H. WIEDEMAN No. 5021 ENGINEER

INDEX TO DRAWINGS

SHEET NO.	DESCRIPTION
1.	PROJECT MAP
2.	EXISTING LAYOUT
3.	PIPING LAYOUT AND GRADING PLAN
4.	HYDRAULIC PROFILE
5.	MODIFICATION TO EXISTING CLARIFIERS NO.1 AND NO.2
6.	CLARIFIER SPLITTER BOXES
7.	CLARIFIERS NO. 3 AND NO. 4
8.	TYPICAL CLARIFIER
9.	CLARIFIERS NO. 3 AND NO. 4 DETAILS
10 - 11.	RETURN SLUDGE PUMPING STATION NO.1
12 - 13	RECYCLE PUMP STATION
14	SEPTIC WASTE DUMP STATION
15	PARTIAL PIPING PLAN AND DETAILS
16	MISCELLANEOUS STRUCTURES AND SEDIMENTATION CONTROL
17	MISCELLANEOUS DETAILS
18	" " "
19	" " "
20	LANDSCAPE PLAN
21	SEDIMENTATION CONTROL AND LANDSCAPE DETAILS
22 - 25	DEWATERING - MAINTENANCE BUILDING - PLANS
26	" " " " - ELEVATIONS
27 - 28	FLOTATION THICKENER - PLANS AT EL. 13.75
29	DEWATERING - MAINTENANCE BUILDING PARTIAL LOWER LEVEL PLANS
30	MAINTENANCE BUILDING GROUND FLOOR PLAN
31	FLOTATION THICKENER PLAN EL.24.25
32	DEWATERING - MAINTENANCE BUILDING PARTIAL 2nd. FLOOR PLAN
33 - 34	" " " " - SECTIONS
35 - 36	FLOTATION THICKENER - SECTIONS
37 - 38	WALL SECTIONS AND DETAILS
39	DOOR AND FINISH SCHEDULES
S-1 - S-11	STRUCTURAL
E-1 - E-14	ELECTRICAL
M-1 - M-9	MECHANICAL

LOCATION MAP
1" = 3000'

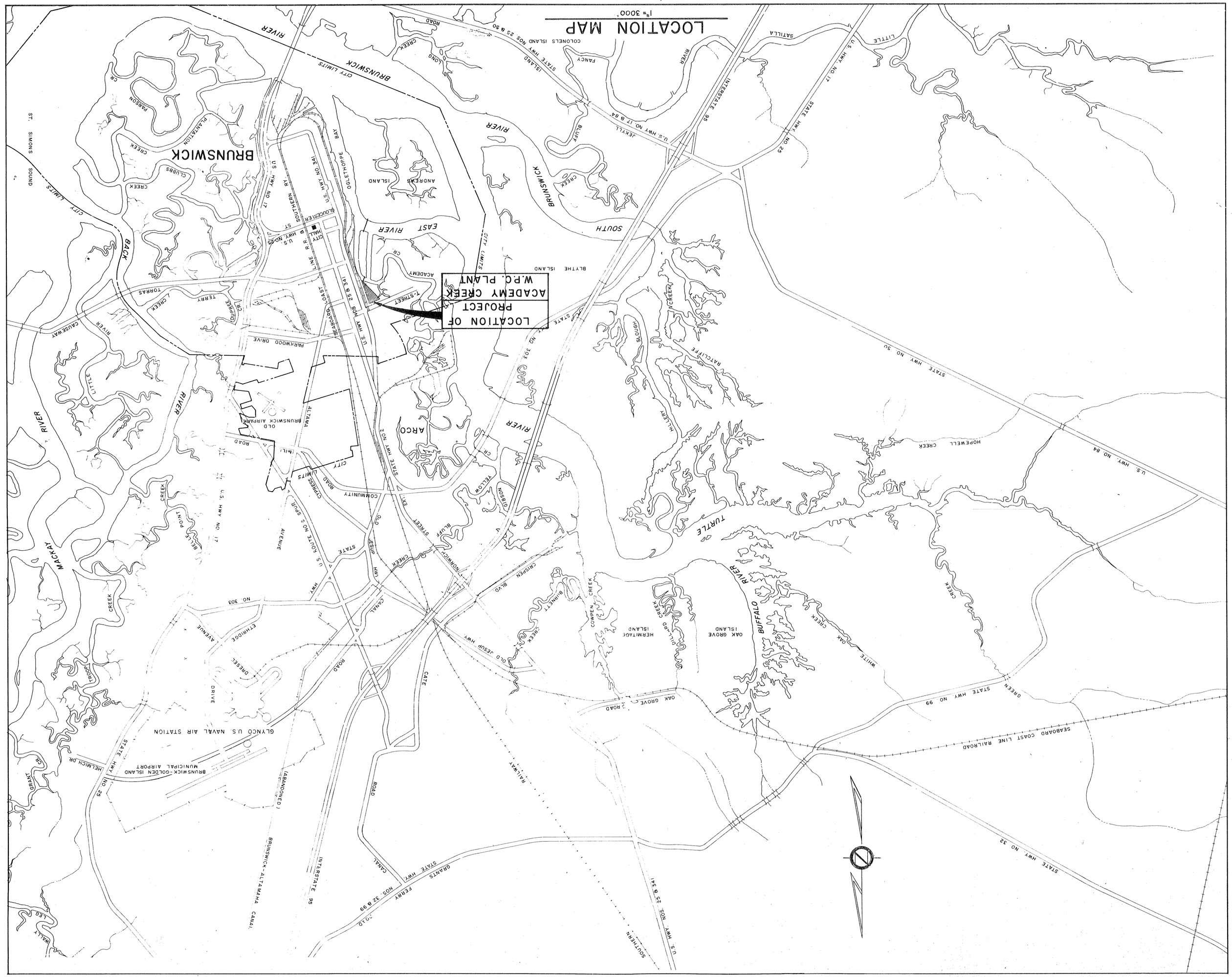

VICINITY MAP
1" = 4 mi.

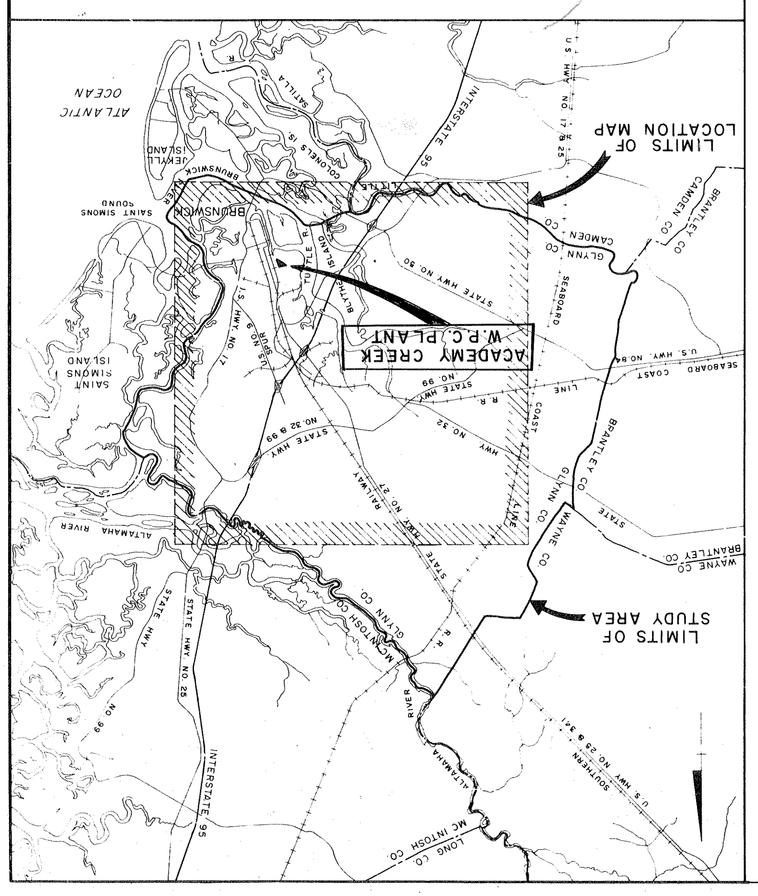

CITY OF BRUNSWICK, GEORGIA
SEWERAGE SYSTEM IMPROVEMENTS

ACADEMY CREEK PLANT

EXISTING LAYOUT

SCALE	WIEDEMAN AND SINGLETON	SHEET
1"=30'	ENGINEERS	2
DATE	ATLANTA GEORGIA	OF 39
JAN. 1984		

EPA PROJECT NO. C130409

APPROVED
STATE OF GEORGIA
WATER QUALITY CONTROL SECTION
ENVIRONMENTAL PROTECTION DIVISION
By Charles E. Dozier P.E.
MAR 15 1984
JACK C. DOZIER P.E.

GEORGIA REGISTERED
No. 5021
PROFESSIONAL ENGINEER
JOHN H. WILDEMAN

DATUM EQUALS USC&GS MEAN SEA LEVEL PLUS 100.00 FT.

LEGEND

STRUCTURES
ROADS
DRAIN LINES (CLAY OR CONC.)
WATER LINES
FENCE
CHLORINE LINES
CONTOURS
POWER POLE
GUY WIRE
HEAD WALL
DROP INLET
MANHOLE
YARD HYDRANT
VALVE
FIRE HYDRANT

N

SEABOARD COAST LINE RAILROAD
NEWCASTLE STREET
BASE LINE
STREET
FENCE
OAK TREE
R/W
CONC R/W MKR
TOP M.H. 109.21 INV. 98.11
6" W.S.
BACKFLOW PREVENTER
6" C.I. INDUSTRIAL WASTE F.M.
16" D.I. INDUSTRIAL WASTE F.M.
INV. 97.58
INV. 97.71
5' DIA. M.H.
TOP M.H. 110.34 INV. 97.74
ASPHALT DRIVE
6" INV. 105.08
TOP M.H. 110.58
6" C 102.51
5' DIA. M.H.
INV. 97.15
6" DRAIN INV. 102.00
30" SEWER
6" INV. 101.00
TOP D.I. 109.68 INV. 104.18
15" STORM SEWER INV. 105.05
TOP D.I. 109.75
TOP D.I. 109.71 INV. 104.71
6" DRAIN INV. 102.00
6" INV. 105.23
D.I. INV. 104.00
INF. M.H.
EXISTING
CONTROL BUILDING
B.M. FIN. FL. 110.50
6" C.I. OVERFLOW SUPNT. DRAWOFF @
AEROBIC DIGESTER NO. 4
AEROBIC DIGESTER NO. 3
DIGESTER NO. 2
DIGESTER NO. 1
HEAD HOUSE
STAIRS
8" SEWER
M.H. INV. 110.52
INV. 105.52
TOP D.I. 109.68 INV. 102.68
6" SUPNT
ASPHALT PAVING
TOP D.I. 109.43 INV. 102.23
15"
4" W.S.
8" C.I.
21"
GRIT TANK
AERATION BASIN NO. 2
INFLUENT SPLITTER BOX "A"
MECH. SURFACE PUMPING STATION NO. 4
PLATFORM
FH
20"
Y.H.
4'-1 1/2"
6"
TOP D.I. 109.47 INV. 105.47
24"
TOP D.I. 109.69 INV. 105.69
HOLDING TANK
AERATION BASIN NO. 1
24" D.I.
OXYGEN PRODUCTION FACILITIES
D.I. INV. 105.00
FENCE
LIQUID O2 STORAGE TANK
D.I. INV. 102.50
D.I. INV. 102.30
8" C.I.
12" C.I. RET. SL.
4" W
30" D.I.
30" C EL. 108.00
SPLITTER BOX "B"
OVERHEAD WALKWAY
36" AERATION
6" O.H.
8" C.I.
L.P. GAS M.H.
4" DIA M.H. INV. 106.00
BELT PRESS
LIQUID SLUDGE TRUCK LOADING
PSA COMPRESSOR BUILDING
EA. 41' X 41' X 13' SWD AERATION BASIN NO. 3
4 CELLS
CLARIFIER NO. 2
CLARIFIER NO. 1
STAIRS
CHLORINE CONTACT CHAMBER
PARSHALL FLUME
D.I. INV. 104.25
16'-0"
4" W.S.
D.I. INV. 105.25
D.I. INV. 102.15
D.I. INV. 105.00
COOLING TOWER
D.I. INV. 105.50
SPLITTER BOX "D"
OVERHEAD WALKWAY
4" W.S.
4" DIA M.H. INV. 97.60
2" W.S.
12" RET. SL.
4" DIA M.H. INV. 98.00
8" INV. 99.00
TOP OF WALL EL. 116.00
CLARIFIER NO. 6
RETURN SLUDGE PUMP STA. NO. 2
TOP OF WALL EL. 116.00
CLARIFIER NO. 5
TEMP 36"
HDW. 15" INV. 105.00
36" INV. 103.50
D.I. INV. 105.50
D.I. INV. 105.75
6" W.S.
4" W.S.
6" DIA M.H. INV. 103.53
D.I. INV. 105.75
36"
D.I. INV. 105.50
D.I. INV. 105.25
4" DIA M.H. INV. 99.50
4" DIA M.H. INV. 99.75
2" W.S.
15" INV. 102.67
D.I. INV. 101.42
D.I. INV. 103.22
INV. 105.50
4" DIA M.H. INV. 108.00
4" W.S.
4-0" GATE
HDW. 15" INV. 105.00
36" INV. 102.50
CHLORINE BUILDING
SAMPLE ROOM
PARSHALL FLUMES
CHLORINE CONTACT TANKS
TOP OF WALL EL. 115.25
36"
INV. 102.00
36" INV. 102.00
4'-0" GATE
D.I. INV. 101.12
255° 30'
APPROX. CITY OF BRUNSWICK, GA. PROPERTY LINE
BASE LINE
D.I. INV. 102.50
15"
24" INV. 100.92
5' DIA. M.H. INV. 100.42
15" INV. 102.00
30" INV. 100.00
2+00
2+60
3+00
4+00
5+00
6+00
7+00
8+00
9+00
B+00
C+00
D+00
E+00
F+00
G+00
H+00
I+00
J+00
K+00

AF 1013248

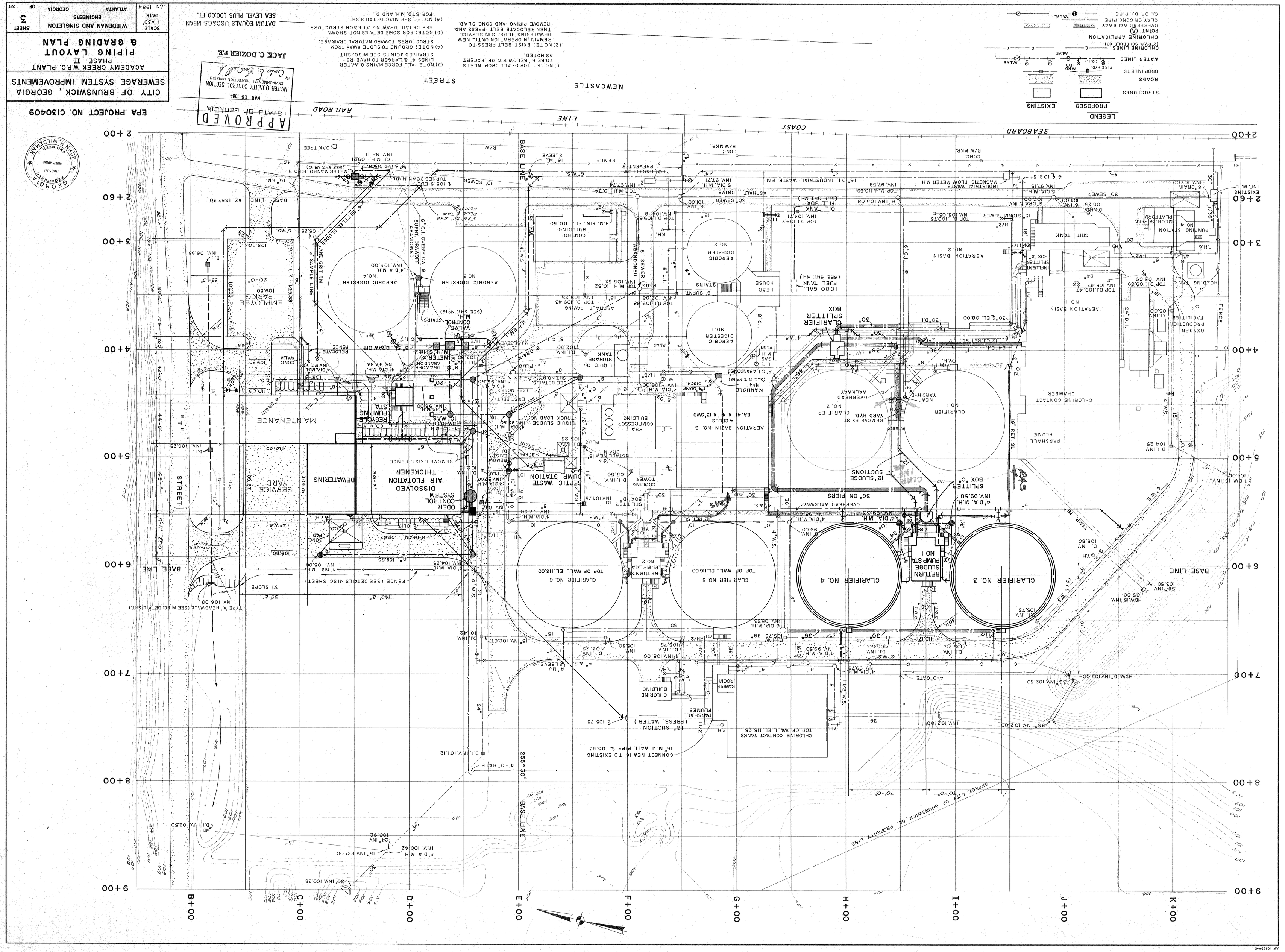

EPA PROJECT NO. C130409
CITY OF BRUNSWICK, GEORGIA
SEWERAGE SYSTEM IMPROVEMENTS
ACADEMY CREEK W.P.C. PLANT
PHASE II
PIPING LAYOUT
& GRADING PLAN
SCALE 1"=30'
DATE JAN. 1984
WIEDEMAN AND SINGLETON
ENGINEERS
ATLANTA GEORGIA
SHEET 3 OF 39
APPROVED
STATE OF GEORGIA
MAR 15 1984
WATER QUALITY CONTROL SECTION
ENVIRONMENTAL PROTECTION DIVISION
By
JACK C. DOZIER P.E.
DATUM EQUALS USC&GS MEAN SEA LEVEL PLUS 100.00 FT.
LEGEND
PROPOSED
EXISTING
STRUCTURES
ROADS
DROP INLETS
WATER LINES
CHLORINE LINES
CHLORINE APPLICATION POINT
OVERHEAD WALKWAY
CLAY OR CONC. PIPE
C.I. OR D.I. PIPE
NEWCASTLE STREET
SEABOARD COAST LINE RAILROAD
BASE LINE
STREET
CLARIFIER NO. 3
CLARIFIER NO. 4
CLARIFIER NO. 5
CLARIFIER NO. 6
CLARIFIER NO. 1
CLARIFIER NO. 2
CLARIFIER SPLITTER BOX
AERATION BASIN NO. 1
AERATION BASIN NO. 2
AERATION BASIN NO. 3
AEROBIC DIGESTER NO. 1
AEROBIC DIGESTER NO. 2
AEROBIC DIGESTER NO. 3
AEROBIC DIGESTER NO. 4
CONTROL BUILDING
PSA COMPRESSOR BUILDING
DISSOLVED AIR FLOTATION THICKENER
ODER CONTROL SYSTEM
DEWATERING
SERVICE YARD
MAINTENANCE
EMPLOYEE PARK'G
RECYCLE PUMPING STA.
SEPTIC WASTE PUMP STATION
COOLING TOWER
CHLORINE CONTACT CHAMBER
PARSHALL FLUME
OXYGEN PRODUCTION FACILITIES
PUMPING STATION NO. 4
GRIT TANK
HOLDING TANK
CHLORINE BUILDING
SAMPLE ROOM
RETURN SLUDGE PUMP STA NO. 1
RETURN SLUDGE PUMP STA NO. 2
CHLORINE CONTACT TANKS
TOP OF WALL EL. 115.25
CONNECT NEW 16" TO EXISTING 16" M.J. WALL PIPE ℄ 105.83
16" SUCTION (PRESS. WATER)
APPROX. CITY OF BRUNSWICK, GA. PROPERTY LINE
255° 30'
B+00
C+00
D+00
E+00
F+00
G+00
H+00
I+00
J+00
K+00
2+00
2+60
3+00
4+00
5+00
6+00
7+00
8+00
9+00

AF 10479A-B

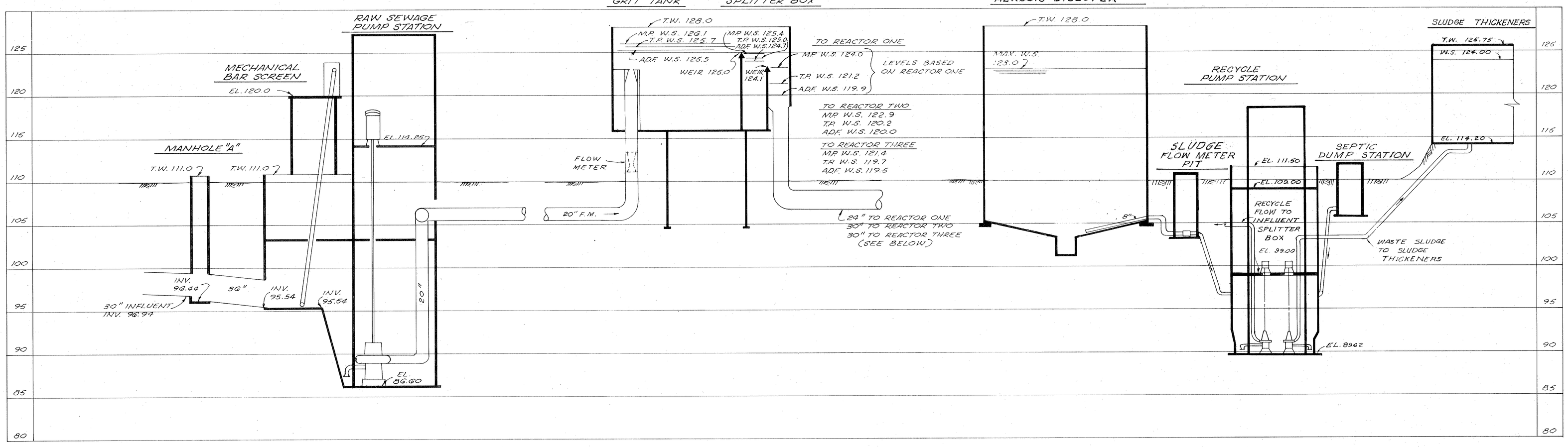

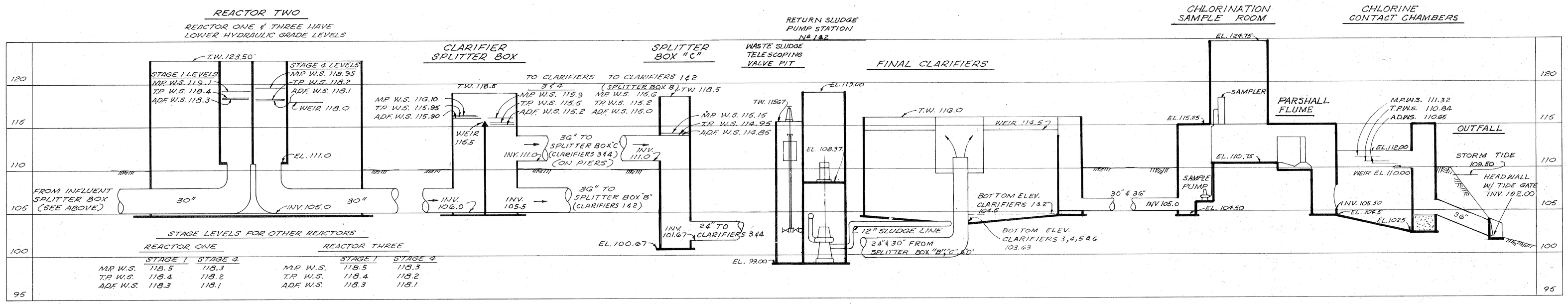

NOTE:
M.P.W.S. – MAXIMUM PEAK WATER SURFACE WITH LARGEST TANK OUT OF SERVICE
T.P.W.S. – TYPICAL PEAK WATER SURFACE WITH ALL TANKS IN SERVICE
A.D.F.W.S. – WATER SURFACE AT AVERAGE DAILY FLOW, ALL TANKS IN SERVICE

APPROVED
STATE OF GEORGIA
MAR 15 1984
WATER QUALITY CONTROL SECTION
ENVIRONMENTAL PROTECTION DIVISION
By Charles E. Crandall Jr.

JACK C. DOZIER P.E.

GEORGIA REGISTERED No. 5011 PROFESSIONAL ENGINEER JOHN H. WIEDEMAN

DATUM EQUALS USC&GS MEAN SEA LEVEL PLUS 100.00 FT.

EPA PROJECT NO. C130409

CITY OF BRUNSWICK, GEORGIA
SEWERAGE SYSTEM IMPROVEMENTS

ACADEMY CREEK PLANT
HYDRAULIC PROFILE
ACADEMY CREEK WPC PLANT

SCALE	WIEDEMAN AND SINGLETON ENGINEERS	SHEET
1"=5' VERT. N.T.S. HORZ. DATE JAN. 1984	ATLANTA GEORGIA	4 OF 39

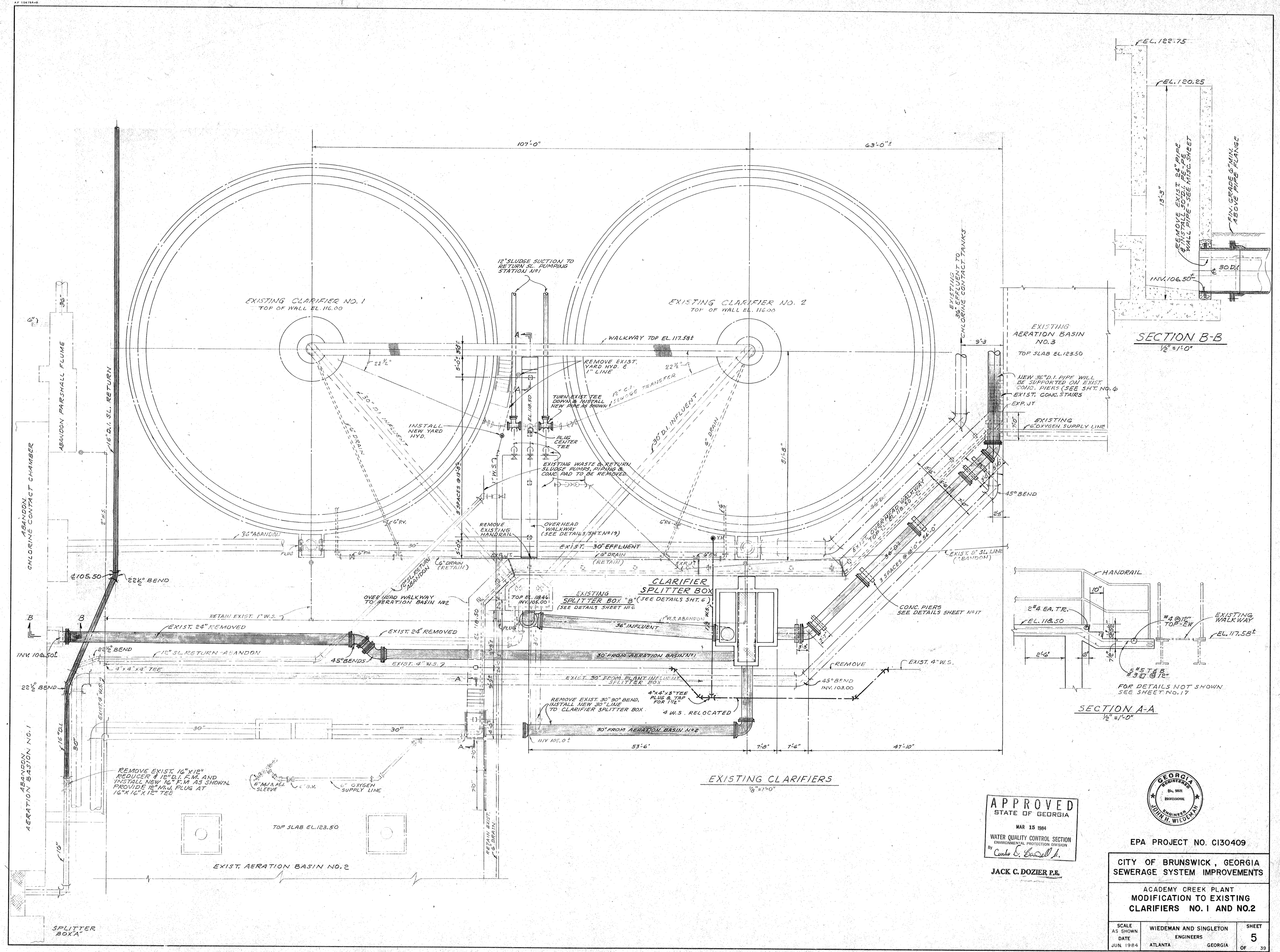

APPROVED
STATE OF GEORGIA
MAR 15 1984
WATER QUALITY CONTROL SECTION
ENVIRONMENTAL PROTECTION DIVISION
By Carlos E. Bardell Jr.

JACK C. DOZIER P.E.

GEORGIA REGISTERED No. 5021 PROFESSIONAL ENGINEER JOHN H. WIEDEMAN

EPA PROJECT NO. C130409

CITY OF BRUNSWICK, GEORGIA
SEWERAGE SYSTEM IMPROVEMENTS

ACADEMY CREEK PLANT
MODIFICATION TO EXISTING
CLARIFIERS NO. 1 AND NO. 2

SCALE AS SHOWN	WIEDEMAN AND SINGLETON ENGINEERS	SHEET
DATE JUN. 1984	ATLANTA GEORGIA	5 OF 39

AF 10479A-B

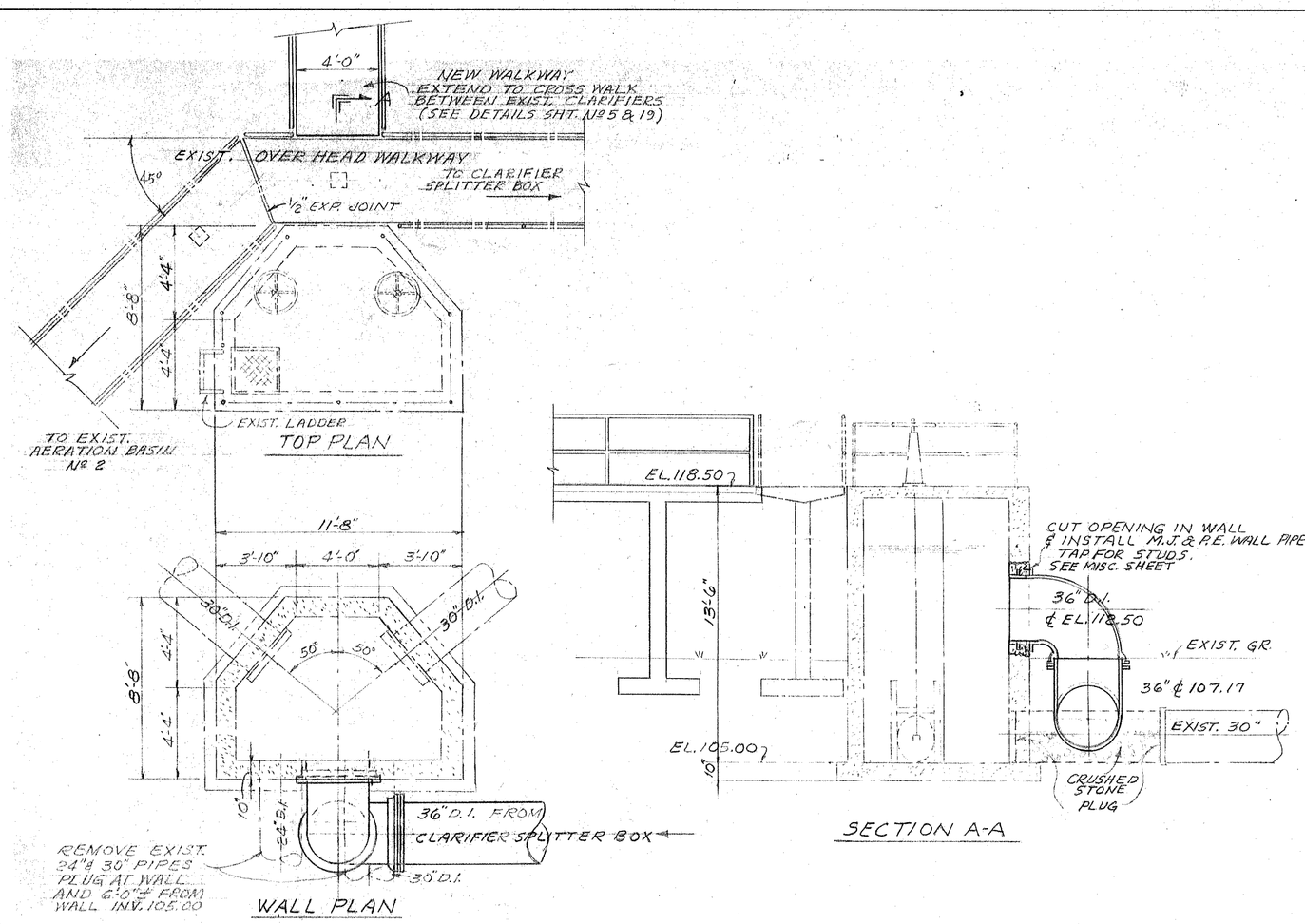

MODIFICATION TO EXIST. SPLITTER BOX "B"

1/4" = 1'-0"

A

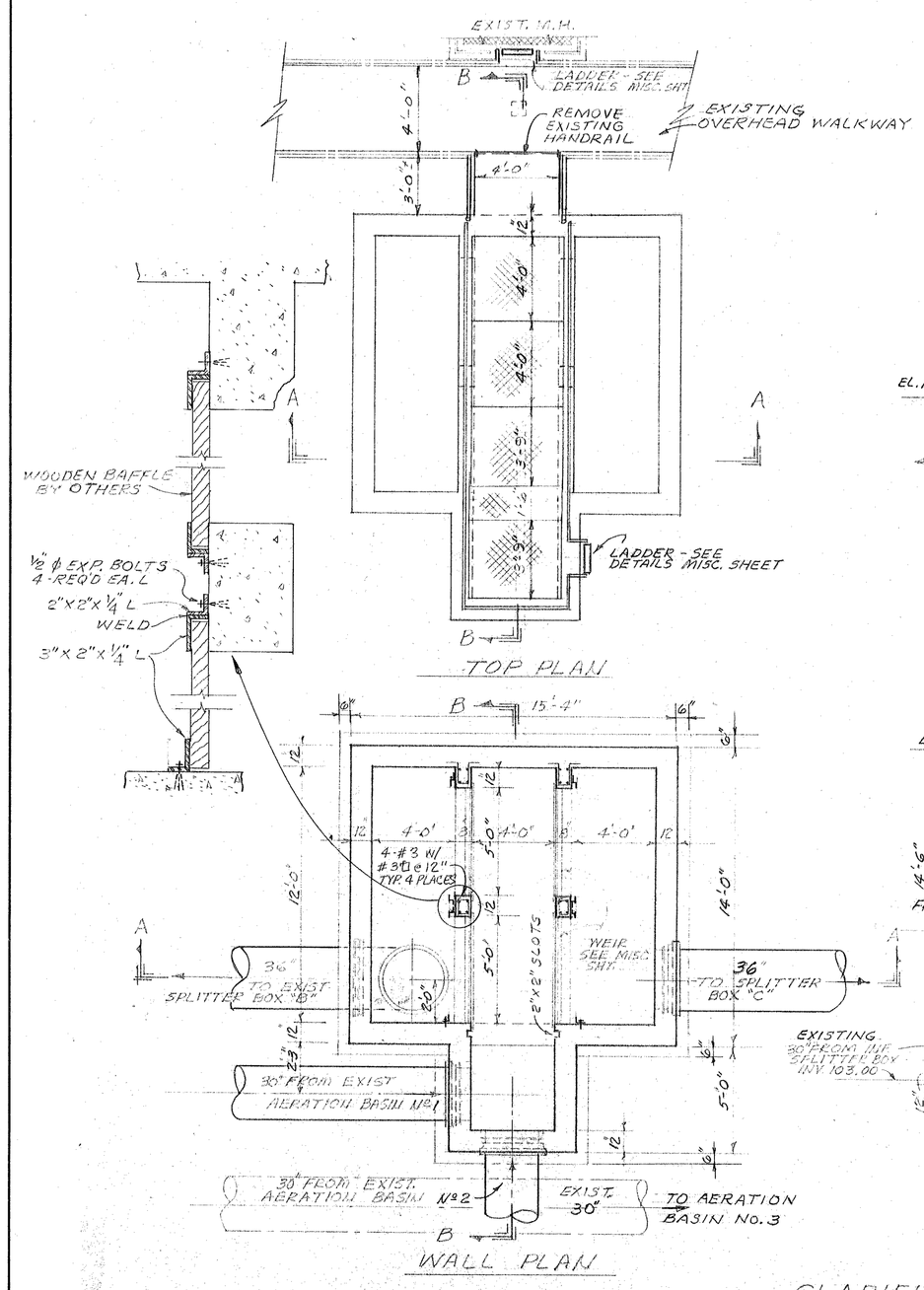

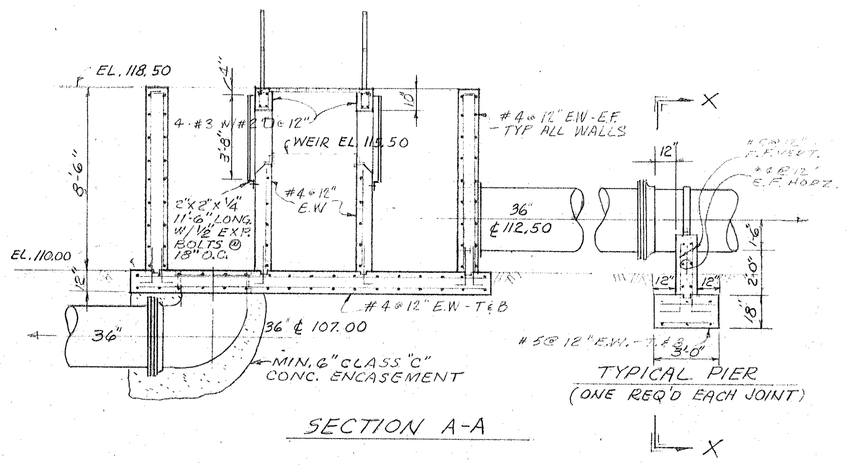

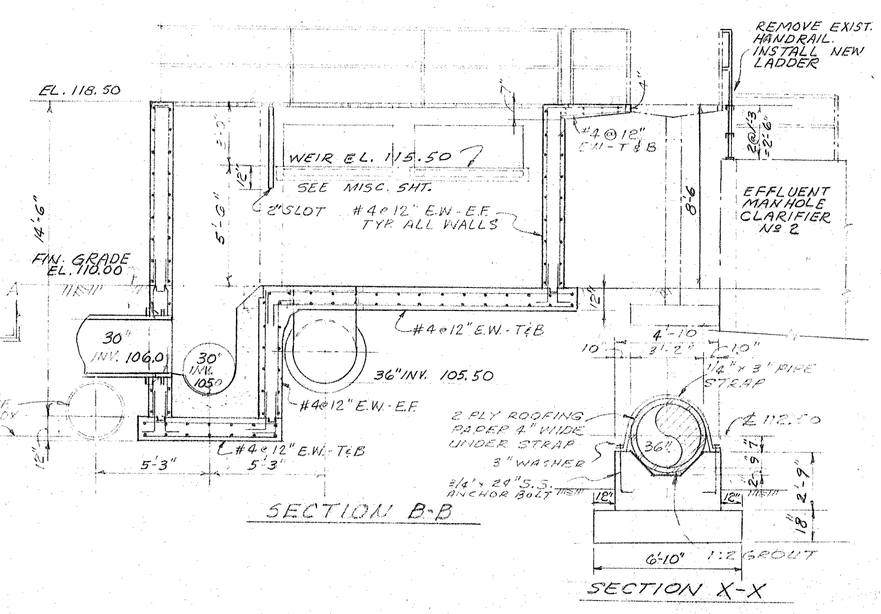

CLARIFIER SPLITTER BOX

1/4" = 1'-0"

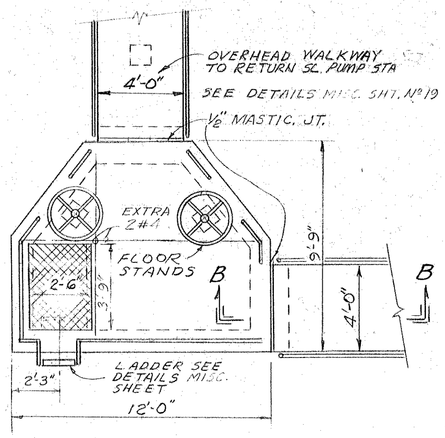

SPLITTER BOX "C"

1/4" = 1'-0"

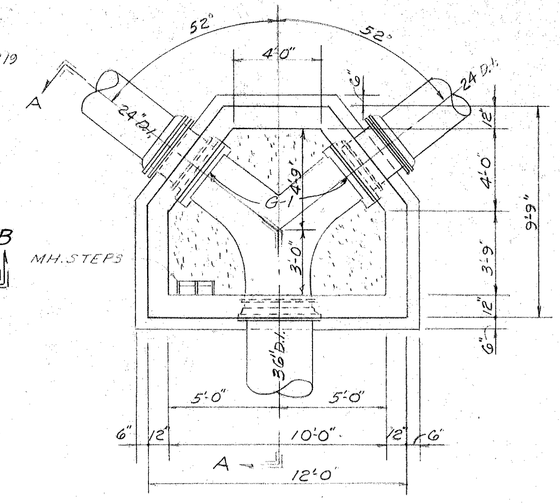

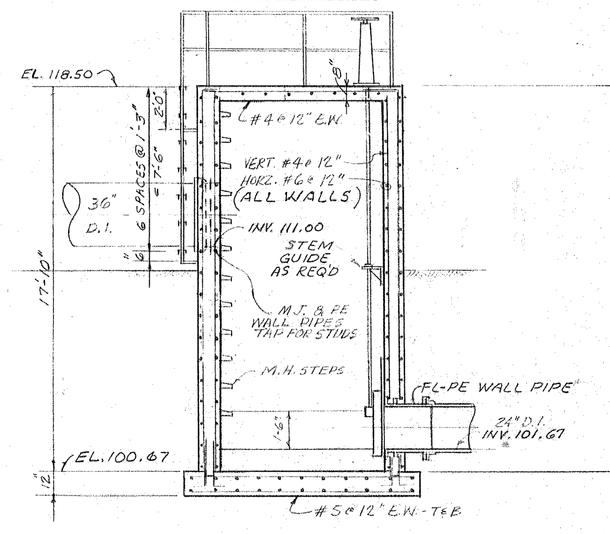

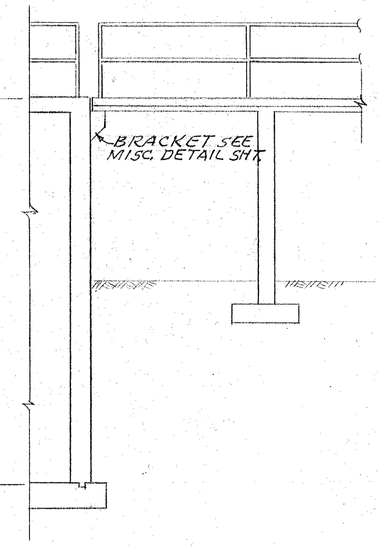

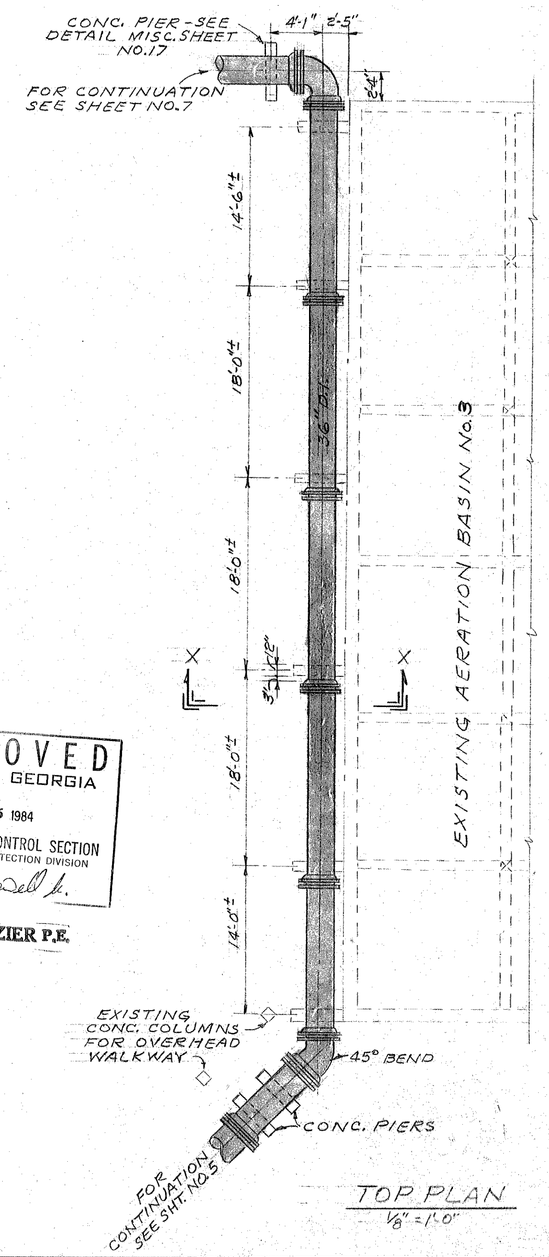

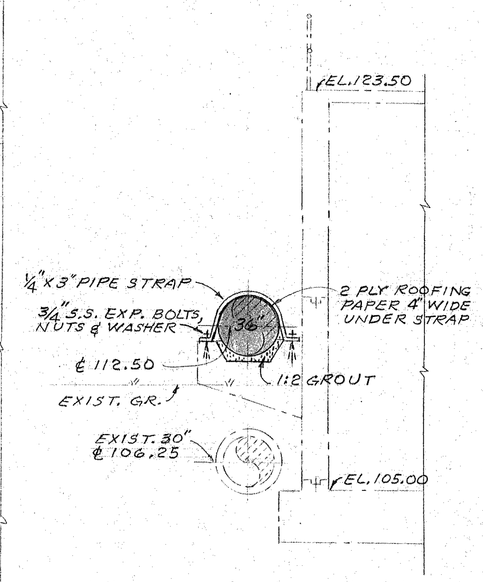

APPROVED
STATE OF GEORGIA
MAR 15 1984
WATER QUALITY CONTROL SECTION
ENVIRONMENTAL PROTECTION DIVISION
By Curtis E. Ewell Jr.

JACK C. DOZIER P.E.

GEORGIA REGISTERED No. 5021 PROFESSIONAL ENGINEER JACK C. WIEDEMAN

EPA PROJECT NO. C130409

CITY OF BRUNSWICK, GEORGIA
SEWERAGE SYSTEM IMPROVEMENTS

ACADEMY CREEK PLANT

CLARIFIER SPLITTER BOXES

SCALE AS SHOWN	WIEDEMAN AND SINGLETON ENGINEERS	SHEET 6
DATE JAN 1984	ATLANTA GEORGIA	OF 39

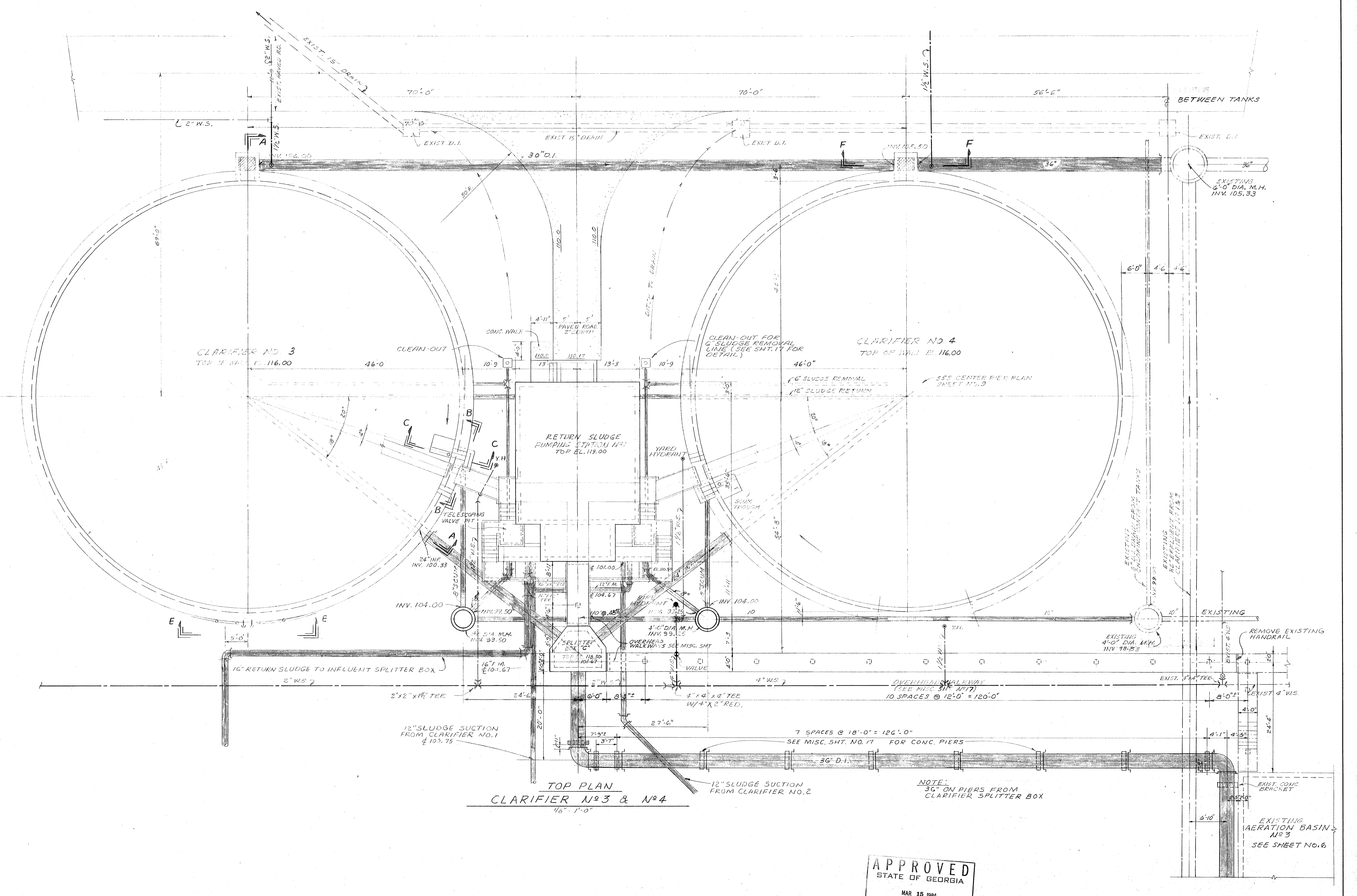

APPROVED
STATE OF GEORGIA
MAR 15 1984
WATER QUALITY CONTROL SECTION
ENVIRONMENTAL PROTECTION DIVISION
By Curtis C. Bowell Jr.

JACK C. DOZIER P.E.

GEORGIA REGISTERED PROFESSIONAL ENGINEER No. 5031 JOHN H. WIEDEMAN

EPA PROJECT NO. C130409

CITY OF BRUNSWICK, GEORGIA
SEWERAGE SYSTEM IMPROVEMENTS

ACADEMY CREEK PLANT

CLARIFIERS NO. 3 AND 4

SCALE AS SHOWN DATE JAN. 1984	WIEDEMAN AND SINGLETON ENGINEERS ATLANTA GEORGIA	SHEET 7 OF 39

AF 10479A-B

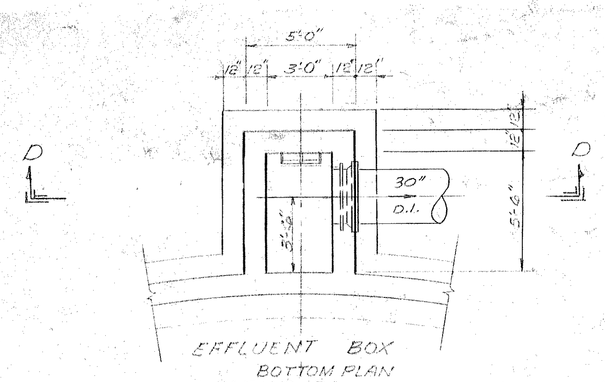

EFFLUENT BOX
BOTTOM PLAN
FOR NO. 3

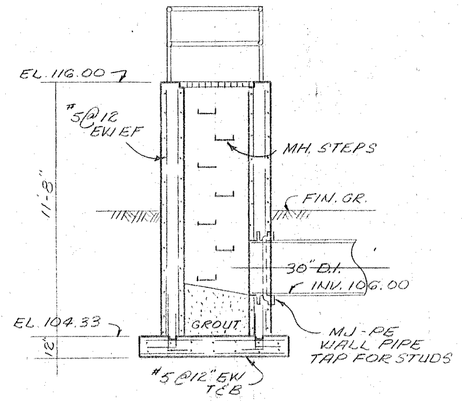

SECTION D-D
1/4" = 1'-0"

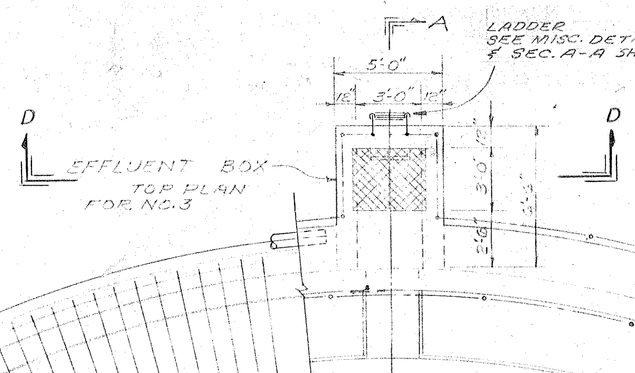

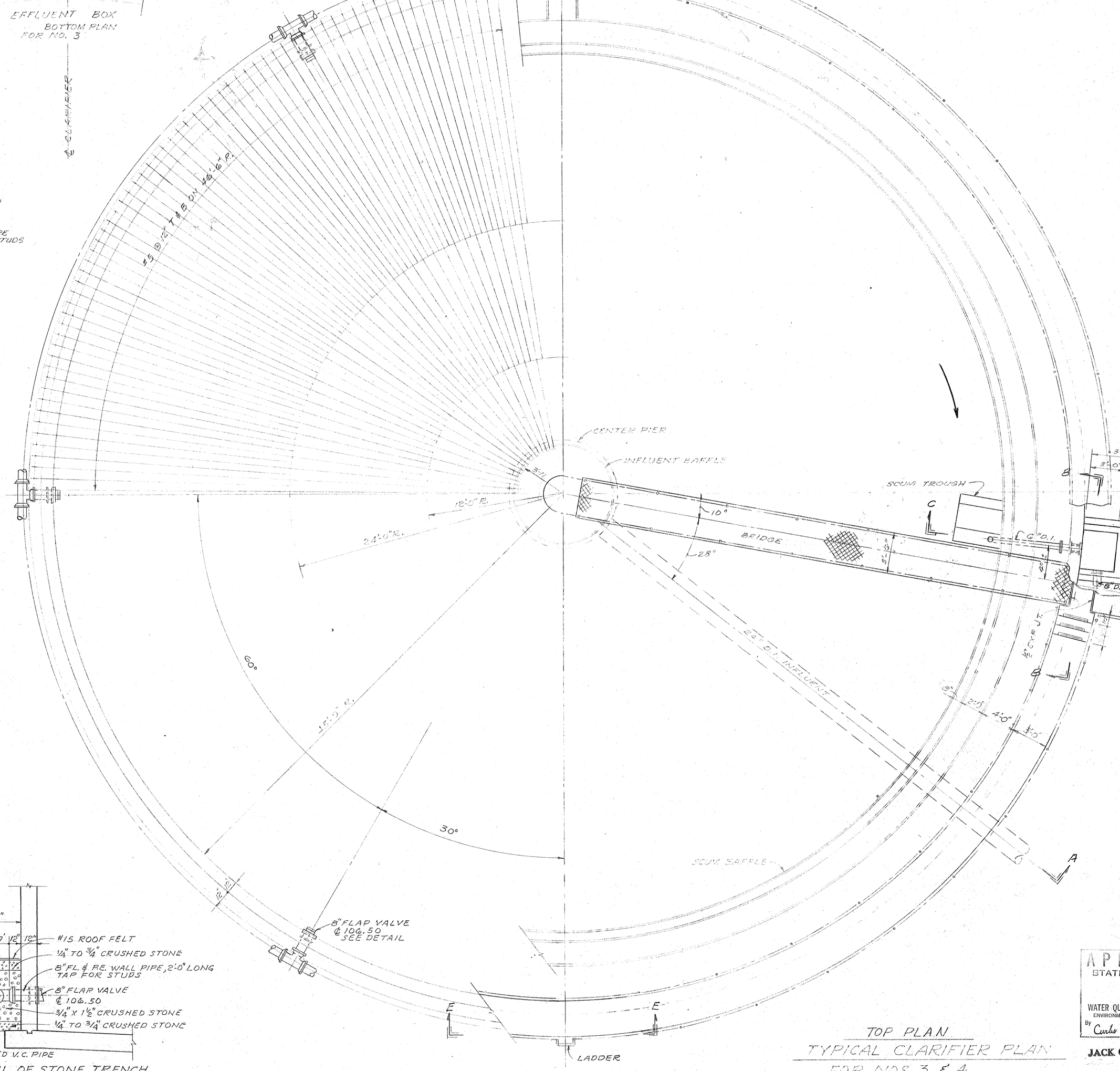

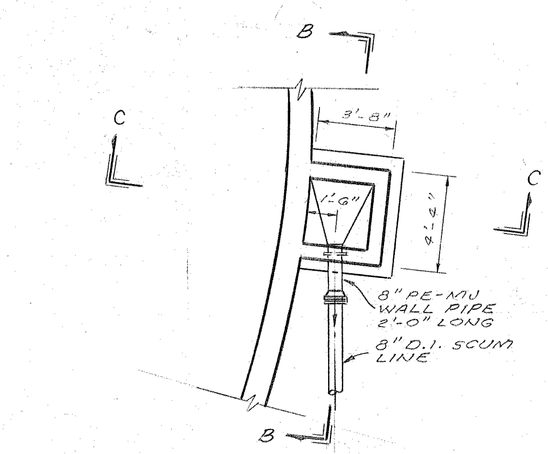

BOTTOM PLAN

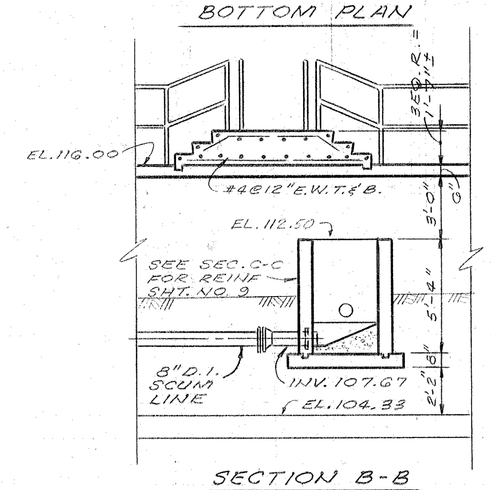

SECTION B-B

SCUM PIT
1/4" = 1'-0"

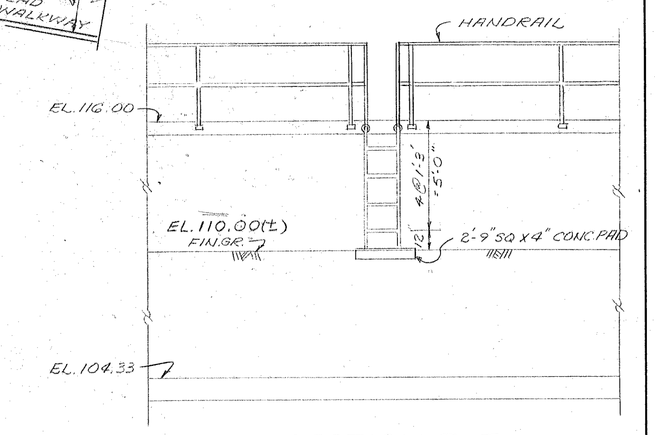

SECTION E-E

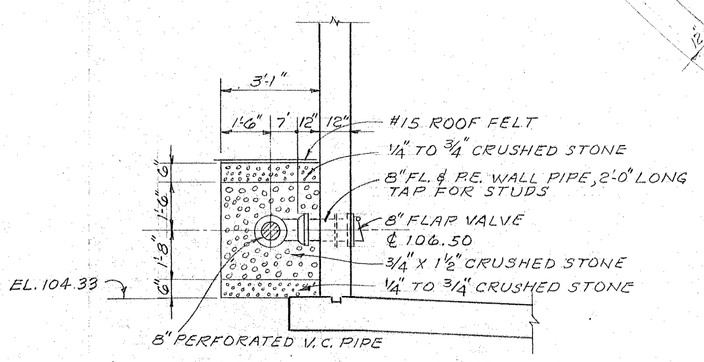

DETAIL OF STONE TRENCH
AND 8" FLAP VALVE
SIX VALVES REQ'D EACH TANK

TOP PLAN
TYPICAL CLARIFIER PLAN
FOR NOS. 3 & 4
1/4" = 1'-0"

GEORGIA REGISTERED No. 5021 PROFESSIONAL ENGINEER JOHN H. WIEDEMAN

APPROVED
STATE OF GEORGIA
MAR 15 1984
WATER QUALITY CONTROL SECTION
ENVIRONMENTAL PROTECTION DIVISION
By Curtis C. Bardell Jr.

JACK C. DOZIER P.E.

EPA PROJECT NO. C130409

CITY OF BRUNSWICK, GEORGIA
SEWERAGE SYSTEM IMPROVEMENTS

ACADEMY CREEK PLANT

TYPICAL CLARIFIER

SCALE		SHEET
AS SHOWN	WIEDEMAN AND SINGLETON ENGINEERS	8
DATE		
JAN. 1984	ATLANTA GEORGIA	OF 39

AF 10479A-B

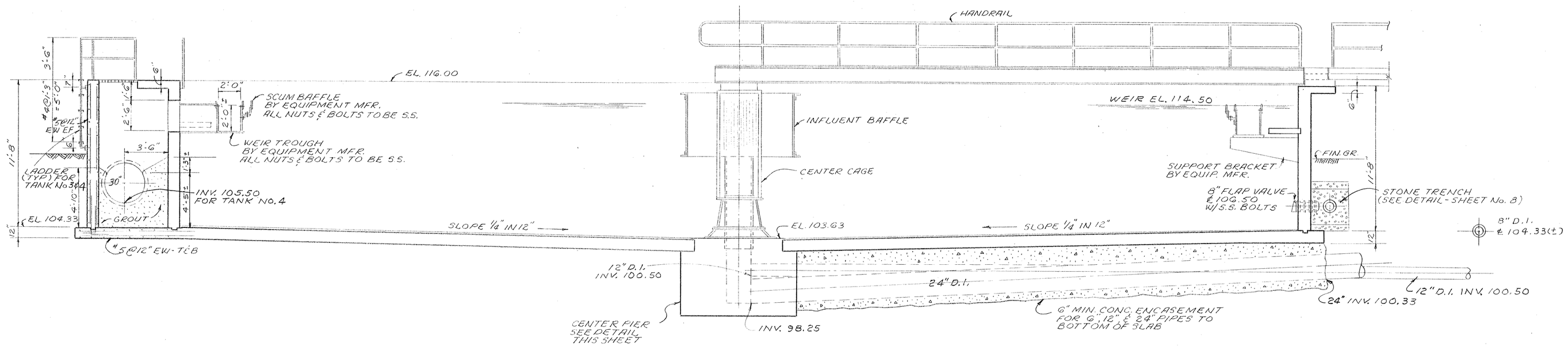

SECTION A-A

1/4" = 1'-0"

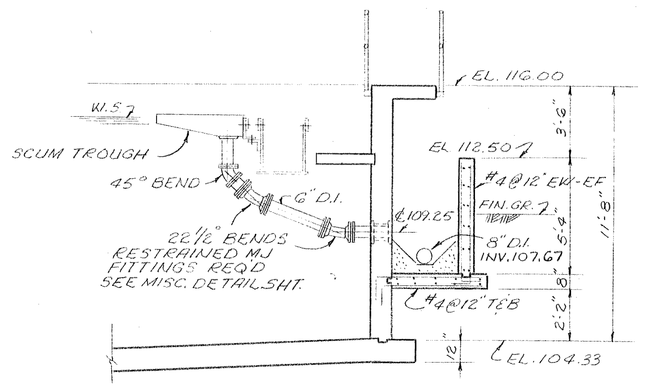

SECTION C-C

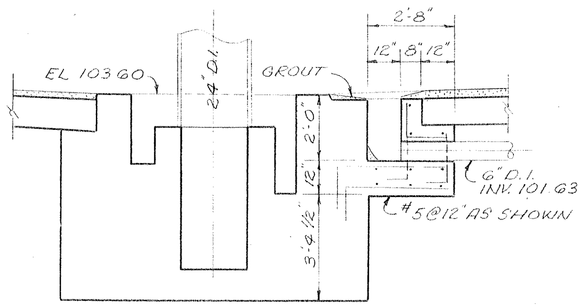

SECTION X-X

3/8" = 1'-0"

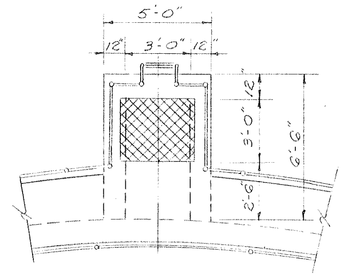

TOP

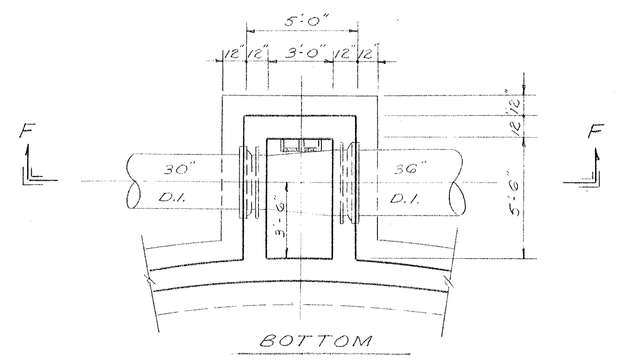

BOTTOM

PLANS

EFFLUENT MANHOLE

CLARIFIER No. 4

1/4" = 1'-0"

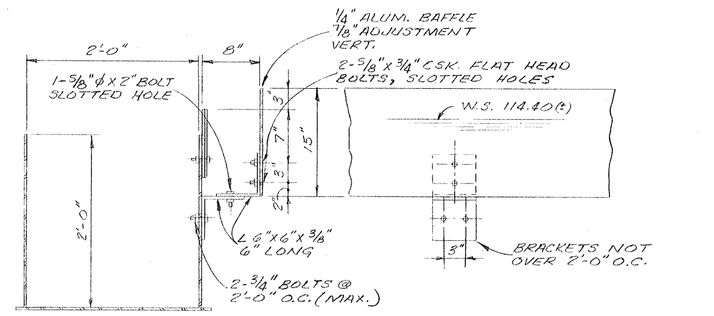

NOTE: BOLTS TO BE S.S., ALL OTHER MATERIAL TO BE ALUM.

SCUM BAFFLE DETAIL

1" = 1'-0"

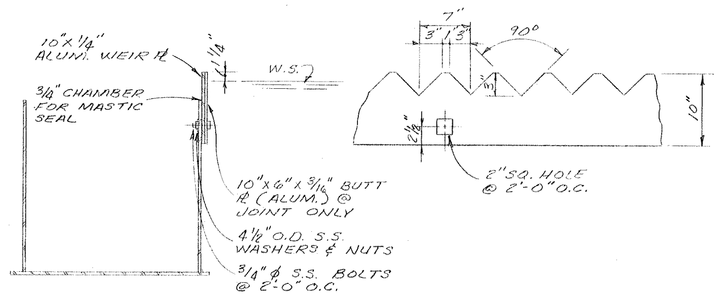

WEIR DETAIL

1" = 1'-0"

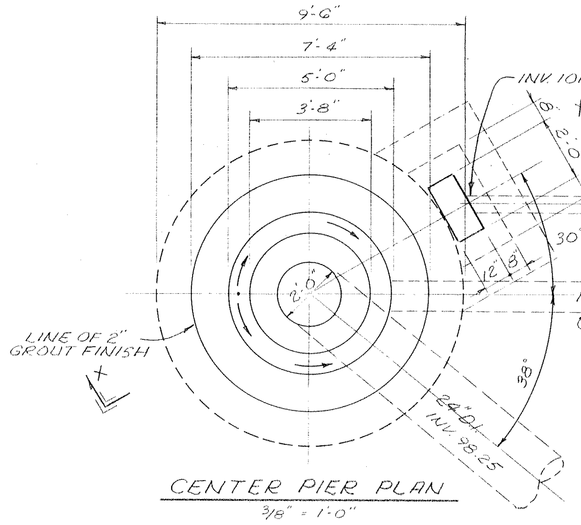

CENTER PIER PLAN

3/16" = 1'-0"

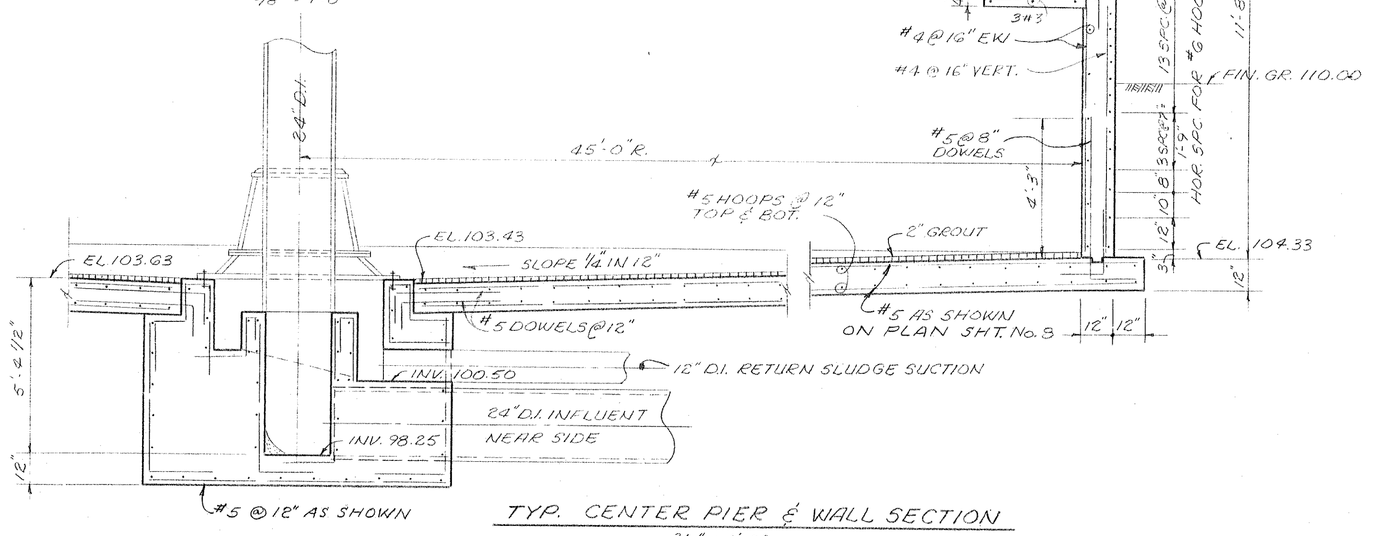

TYP. CENTER PIER & WALL SECTION

3/16" = 1'-0"

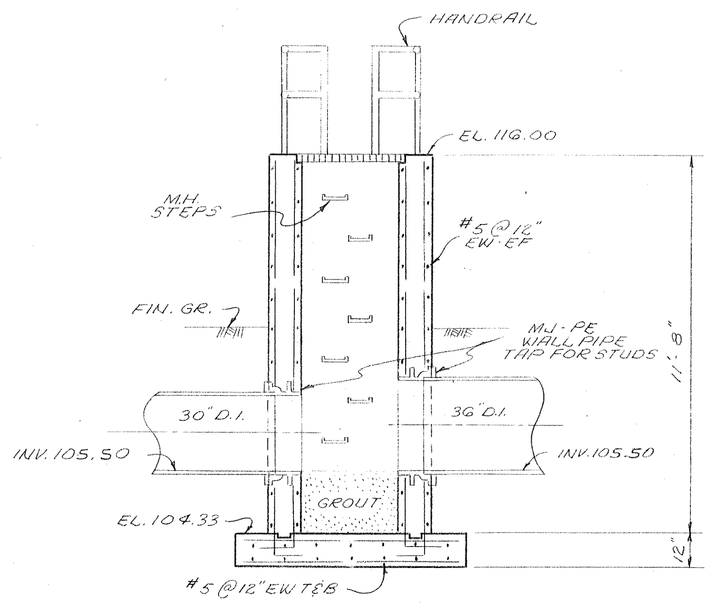

SECTION F-F

3/8" = 1'-0"

APPROVED
STATE OF GEORGIA
MAR 15 1984
WATER QUALITY CONTROL SECTION
ENVIRONMENTAL PROTECTION DIVISION
By Curtis E. Bardell Jr.

JACK C. DOZIER P.E.

GEORGIA REGISTERED No. 5021 PROFESSIONAL ENGINEER JOHN H. WIEDEMAN

EPA PROJECT NO. C130409

CITY OF BRUNSWICK, GEORGIA
SEWERAGE SYSTEM IMPROVEMENTS

ACADEMY CREEK PLANT

CLARIFIERS NO. 3 & 4 DETAILS

SCALE	WIEDEMAN AND SINGLETON ENGINEERS	SHEET
AS SHOWN		9
DATE	ATLANTA GEORGIA	OF 39
JAN. 1984		

AF 10479A-B

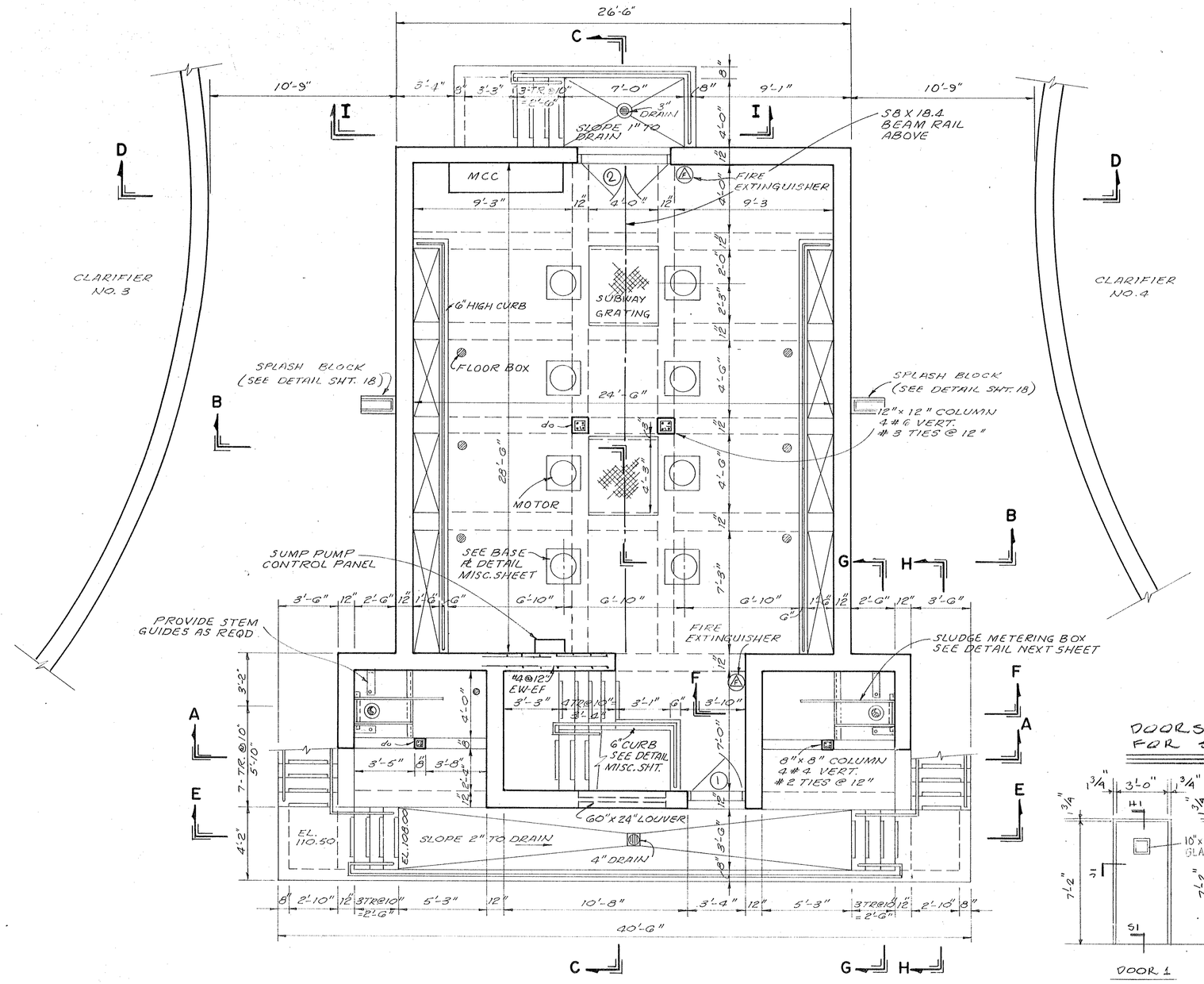

ENTRANCE FLOOR & MOTOR ROOM PLAN

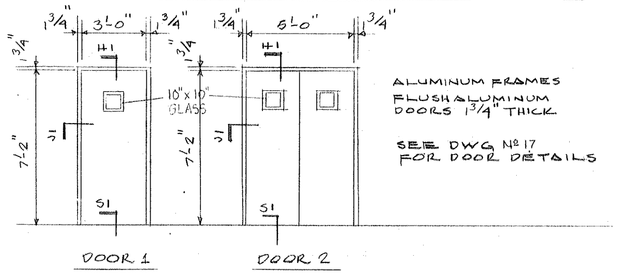

DOORS AND HARDWARE FOR STATIONS Nº 1 & Nº 2

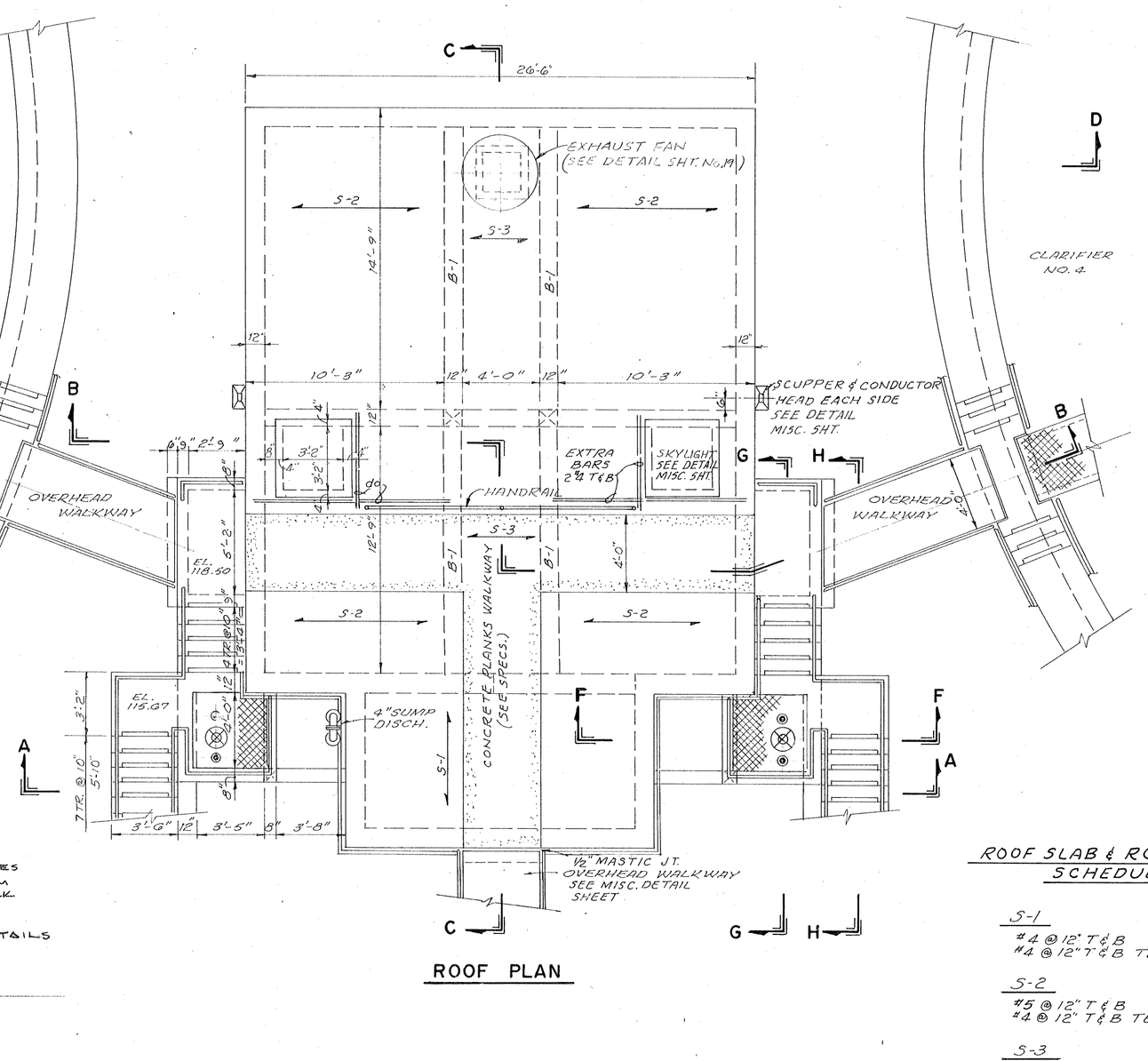

ROOF PLAN

ROOF SLAB & ROOF BEAM SCHEDULE

S-1
#4 @ 12" T & B
#4 @ 12" T & B TEMP.

S-2
#5 @ 12" T & B
#4 @ 12" T & B TEMP

S-3
#5 @ 6" T & B
#4 @ 12" T & B

B-1 12"X24"
4 #8 T & B HKD AT WALL
#3 @ 4½", 4 @ 6", 3 @ 8", CONT. @ 12" FROM EA. END

HARDWARE SCHEDULE

MANUFACTURERS:
(1) LAWNEER, (2) NORTON, (3) SARGENT

HDW SET 1:	DOOR 1		
1½ PAIR BUTT HINGES	4½"x4"	26D	(1)
1 LOCKSET	64-7737-08	28	(3)
1 CLOSER	1605	28	(2)
1 CLOSER STOP	6720	28	(2)
1 THRESHOLD	4" X ½"	28	(1)

HDW SET 2:	DOOR 2		
3 PAIR BUTT HINGES	4½" X 4"	26D	(1)
1 LOCKSET	64-7737-08	28	(3)
2 CLOSERS	1605	28	(2)
2 CLOSER STOPS	6720		(2)
1 PAIR FLUSH BOLTS		28	(1)
1 THRESHOLD	4" X ½"	28	(1)

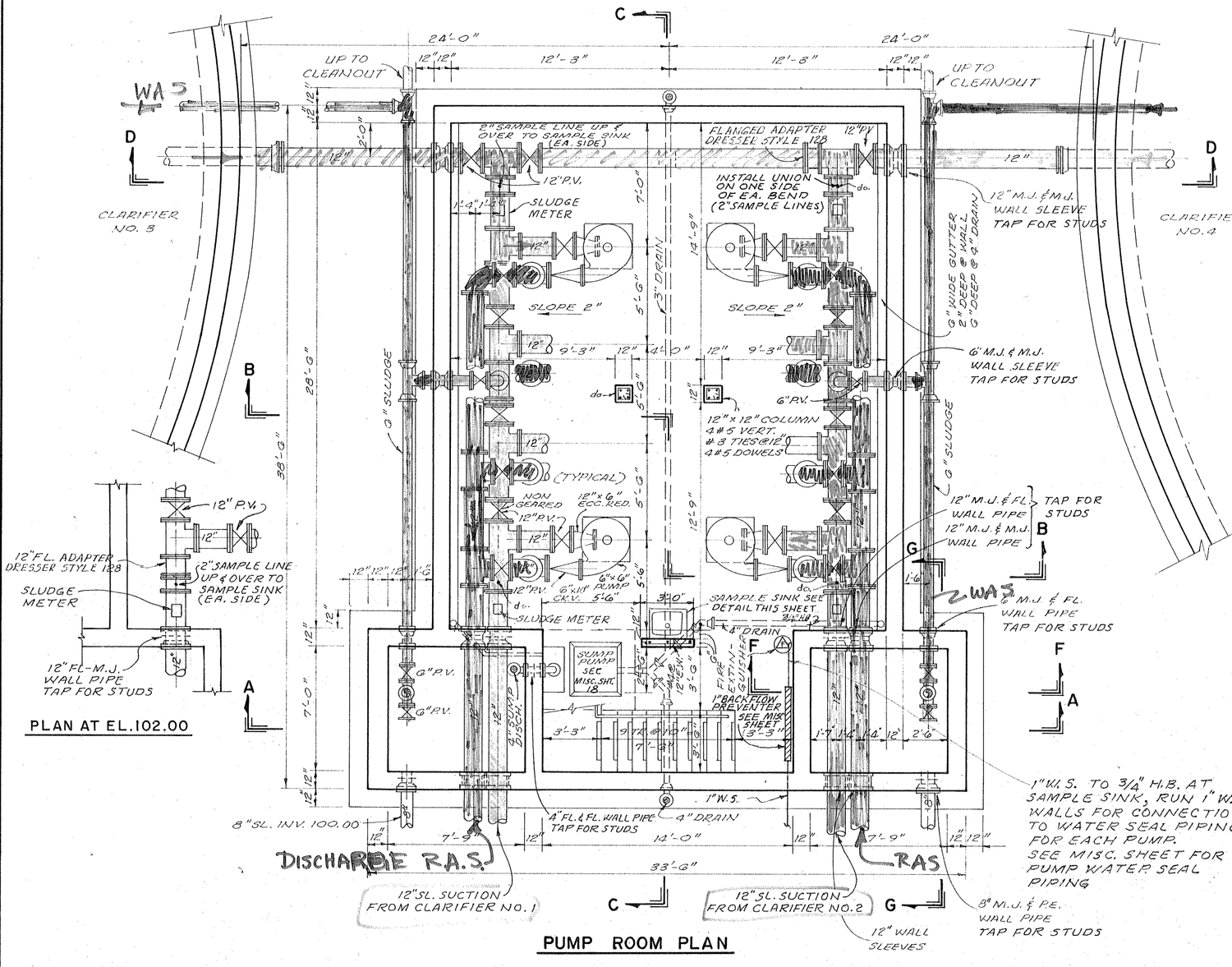

PUMP ROOM PLAN

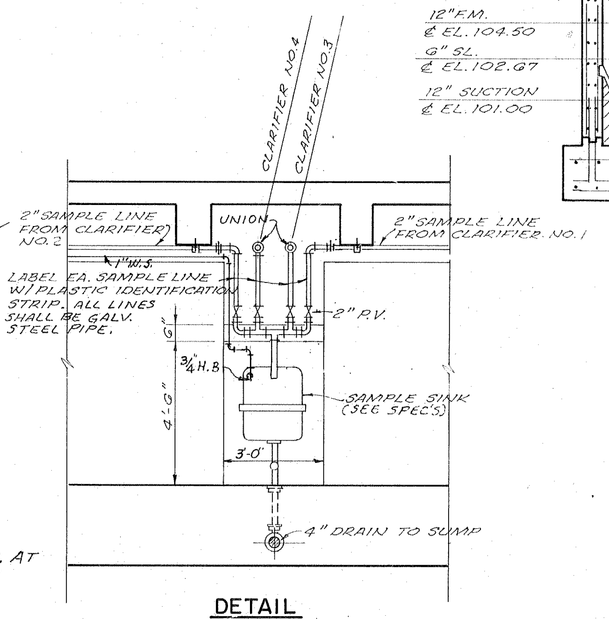

DETAIL
SAMPLE SINK PIPING
3/8"=1'-0"

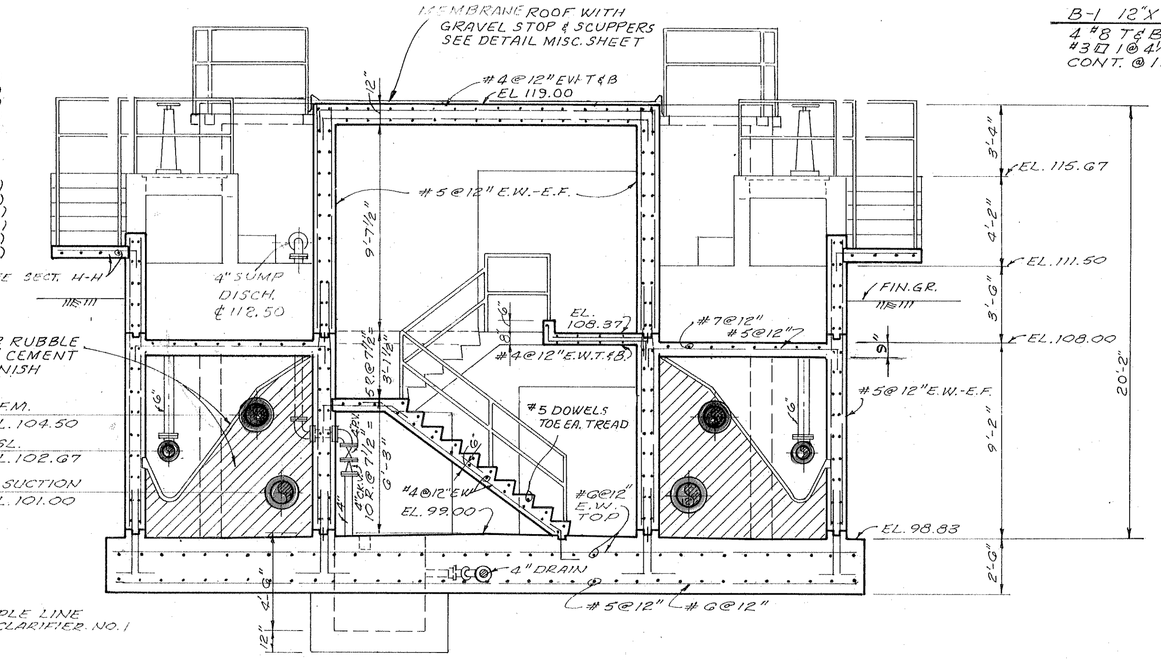

SECTION A-A

APPROVED
STATE OF GEORGIA
MAR 15 1984
WATER QUALITY CONTROL SECTION
ENVIRONMENTAL PROTECTION DIVISION
By Curtis L. Bardell Jr.

JACK C. DOZIER P.E.

GEORGIA REGISTERED No. 5021 PROFESSIONAL ENGINEER JOHN H. WIEDEMAN

EPA PROJECT NO. C130409

CITY OF BRUNSWICK, GEORGIA
SEWERAGE SYSTEM IMPROVEMENTS

ACADEMY CREEK PLANT
RETURN SLUDGE PUMPING STATION Nº 1

SCALE	WIEDEMAN AND SINGLETON ENGINEERS	SHEET
1/4"=1'-0"	ATLANTA GEORGIA	10
DATE JAN. 1984		OF 39

AF 10479A+B

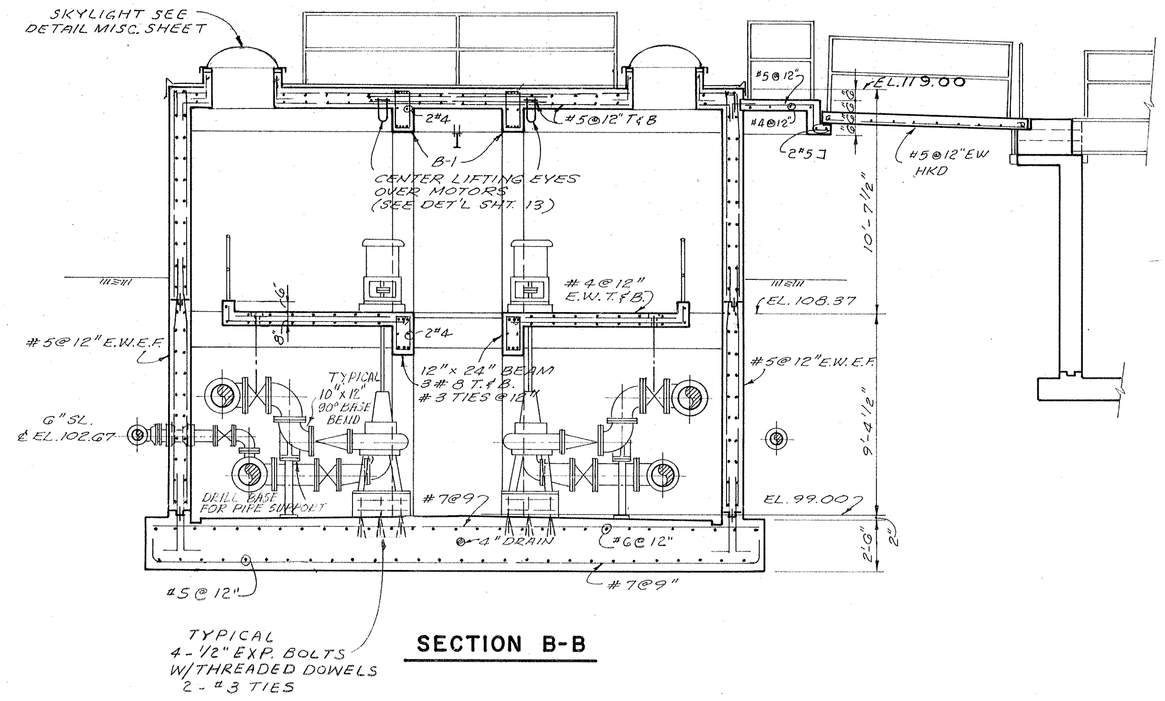

SECTION B-B

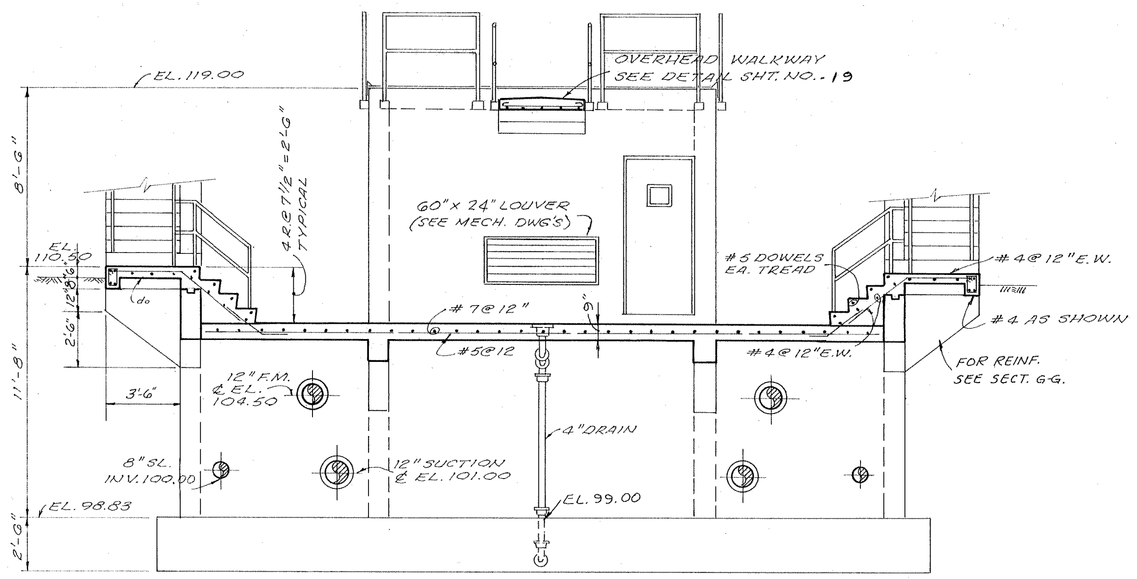

SECTION E-E

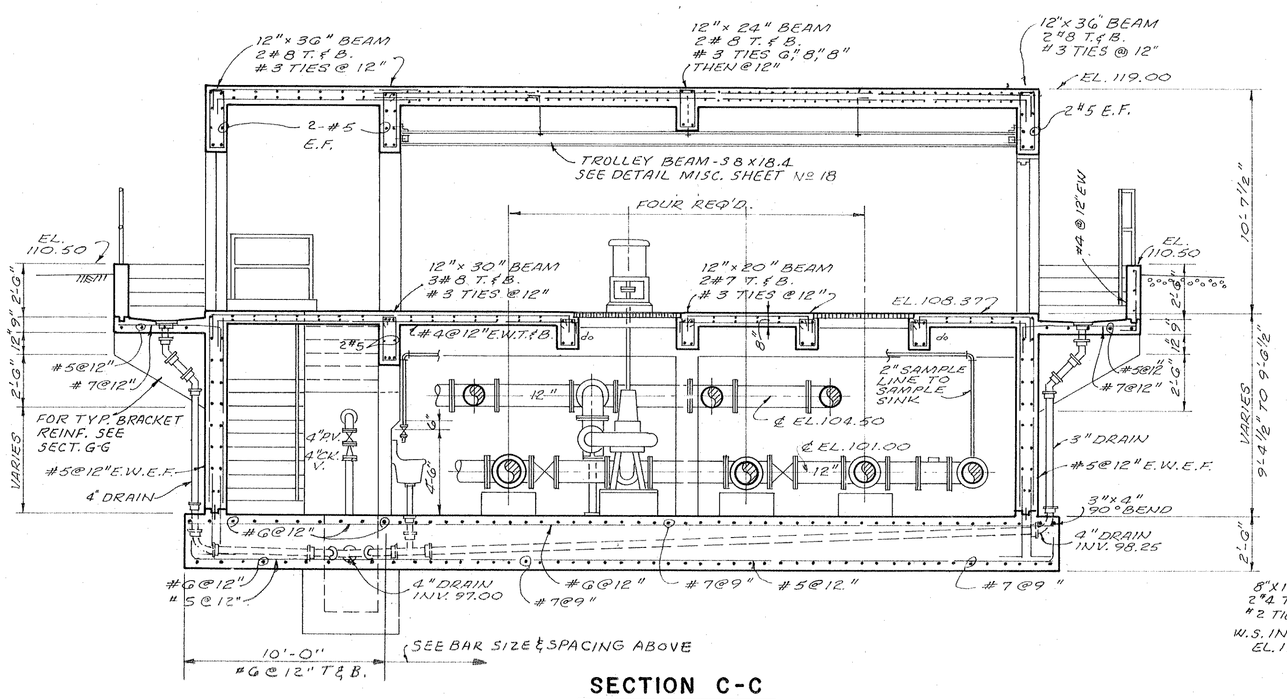

SECTION C-C

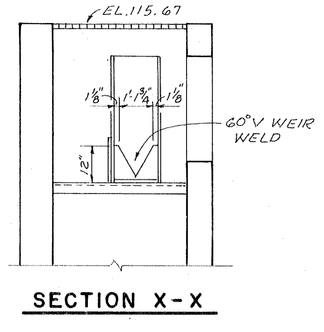

SECTION X-X

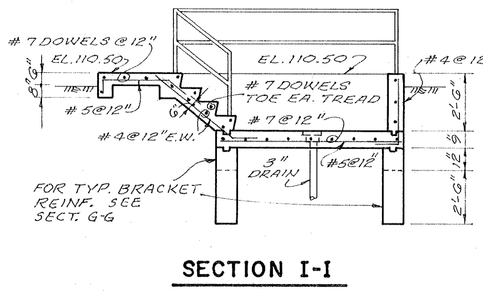

SECTION I-I

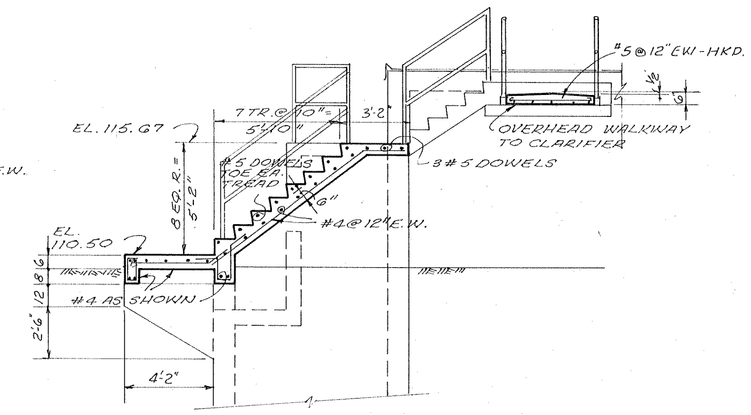

SECTION H-H

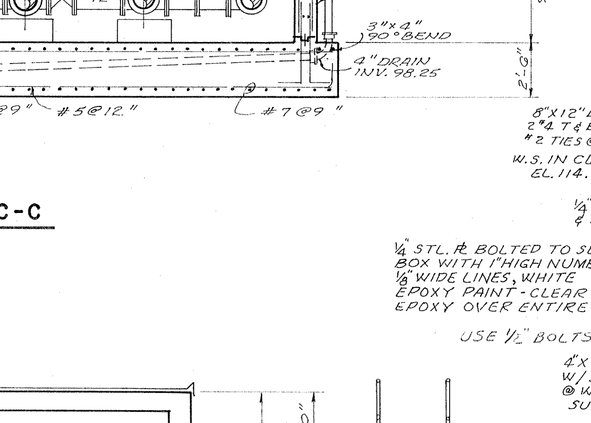

SECTION Y-Y

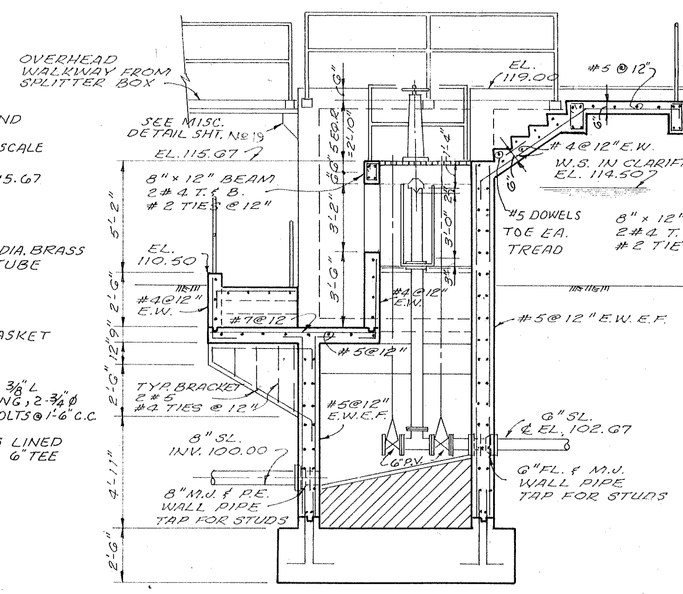

SECTION G-G

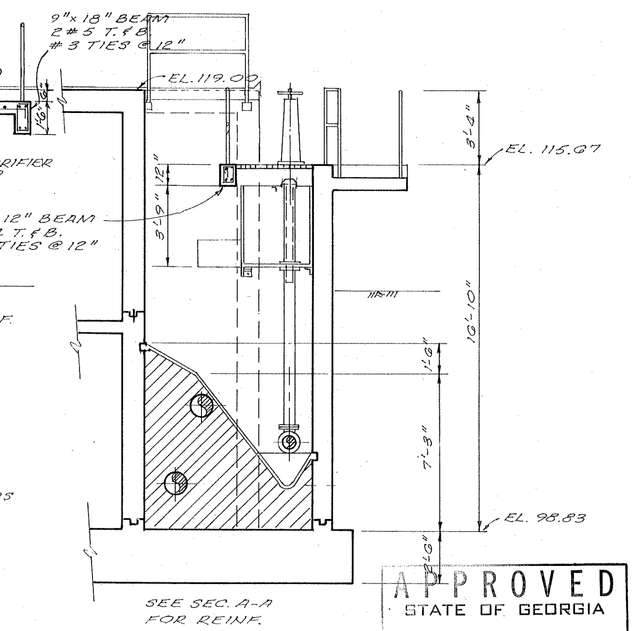

SECTION F-F

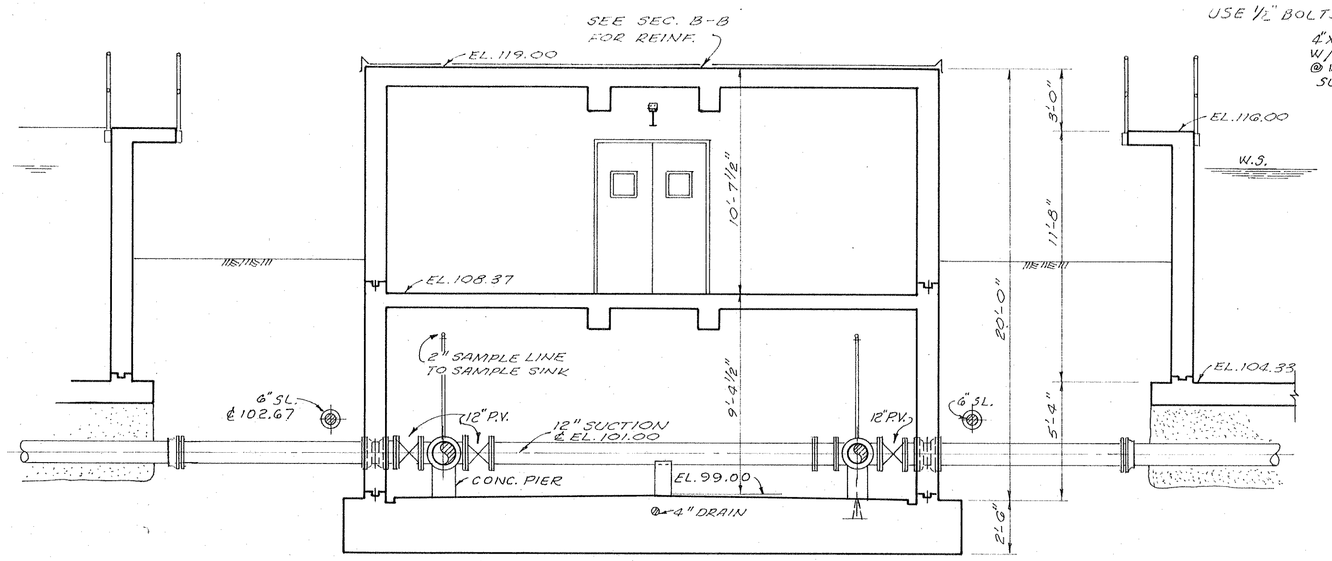

SECTION D-D

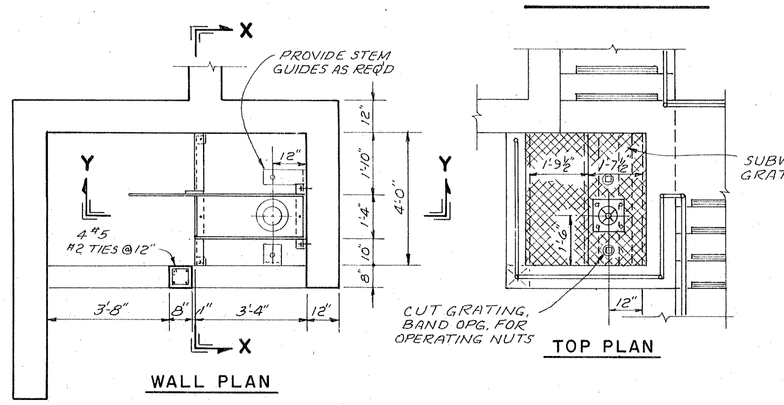

DETAILS - TELESCOPING VALVE AND SLUDGE METERING BOX

3/8" = 1'-0"

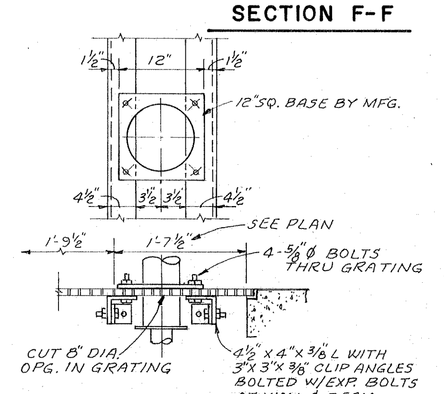

DETAIL - FLOOR STAND SUPPORT

1" = 1'-0"

APPROVED
STATE OF GEORGIA
MAR 15 1984
WATER QUALITY CONTROL SECTION
ENVIRONMENTAL PROTECTION DIVISION
By Charles E. Boswell Jr.

JACK C. DOZIER P.E.

GEORGIA REGISTERED PROFESSIONAL ENGINEER

EPA PROJECT NO. C130409

CITY OF BRUNSWICK, GEORGIA
SEWERAGE SYSTEM IMPROVEMENTS

ACADEMY CREEK PLANT

RETURN SLUDGE PUMPING STATION № 1

SCALE	WIEDEMAN AND SINGLETON ENGINEERS	SHEET
1/4" = 1'-0"		11
DATE	ATLANTA GEORGIA	OF 39
JAN. 1984		

AF 10479A-B

DOORS AND HARDWARE

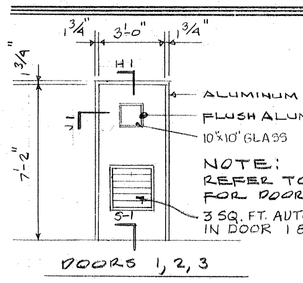

DOORS 1, 2, 3

HARDWARE SCHEDULE

MANUFACTURERS
(1) KAWNEER, (2) NORTON, (3) SARGENT (4) IVES

HDW SET 1	DOORS 1, 2		
1½ PAIR BUTT HINGES	4½ X 9	26D	(1)
1 PASSAGE SET	7715-06	28	(3)
1 WALL STOP	903 1½	28	(4)

HDW SET 2	DOOR 3		
1½ PAIR BUTT HINGES	4½ X 4	26D	(1)
1 LOCKSET	64-7737-06	28	(3)
1 CLOSER	1605	28	(2)
1 CLOSER STOP	6720	28	(2)
1 THRESHOLD	4" X 1/2"	28	(1)

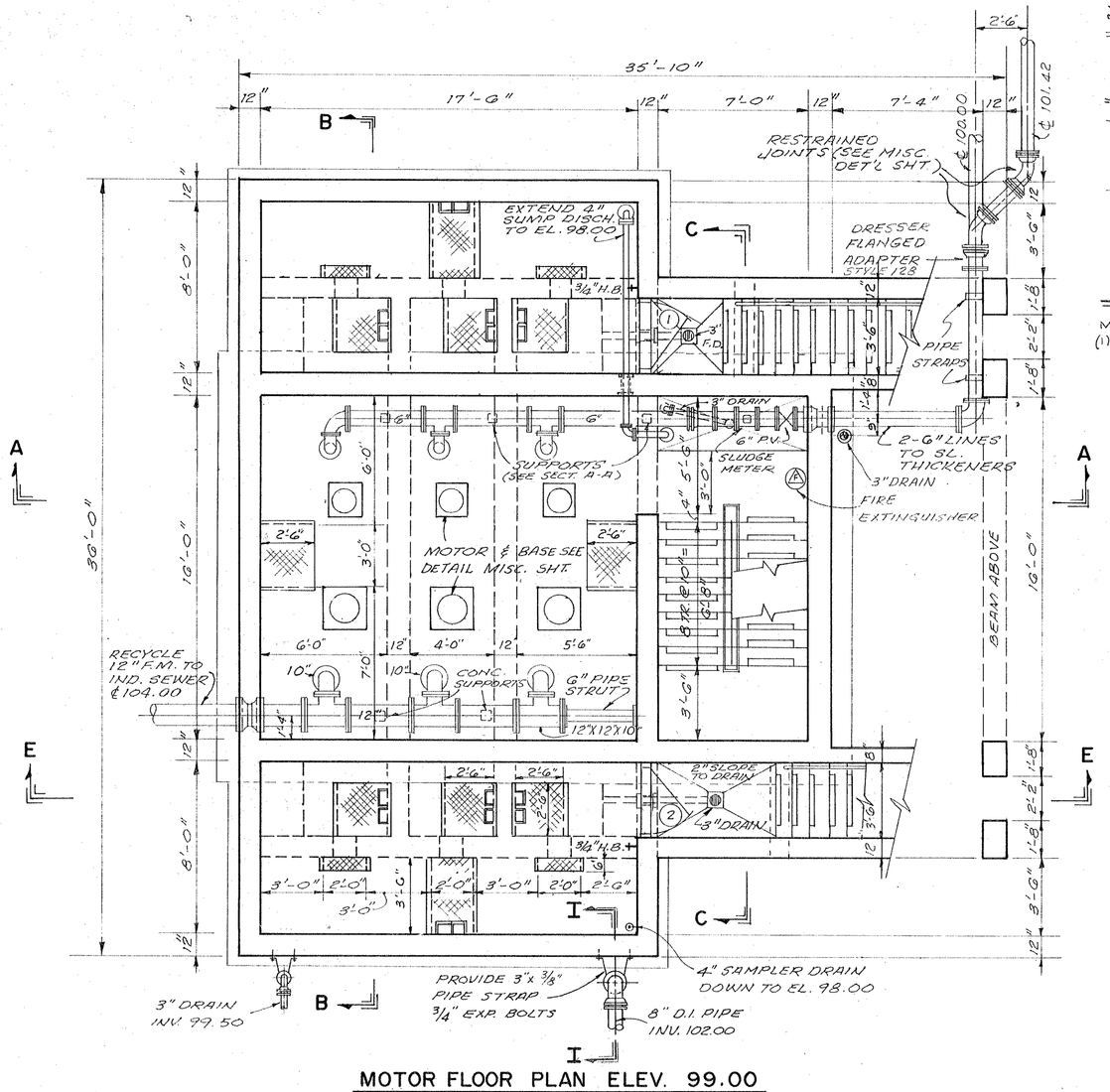

I
MOTOR FLOOR PLAN ELEV. 99.00

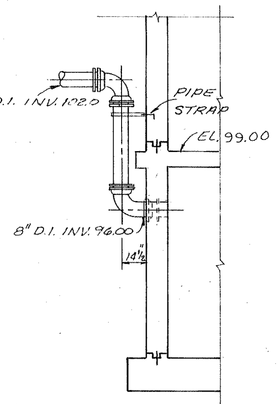

SECTION I-I

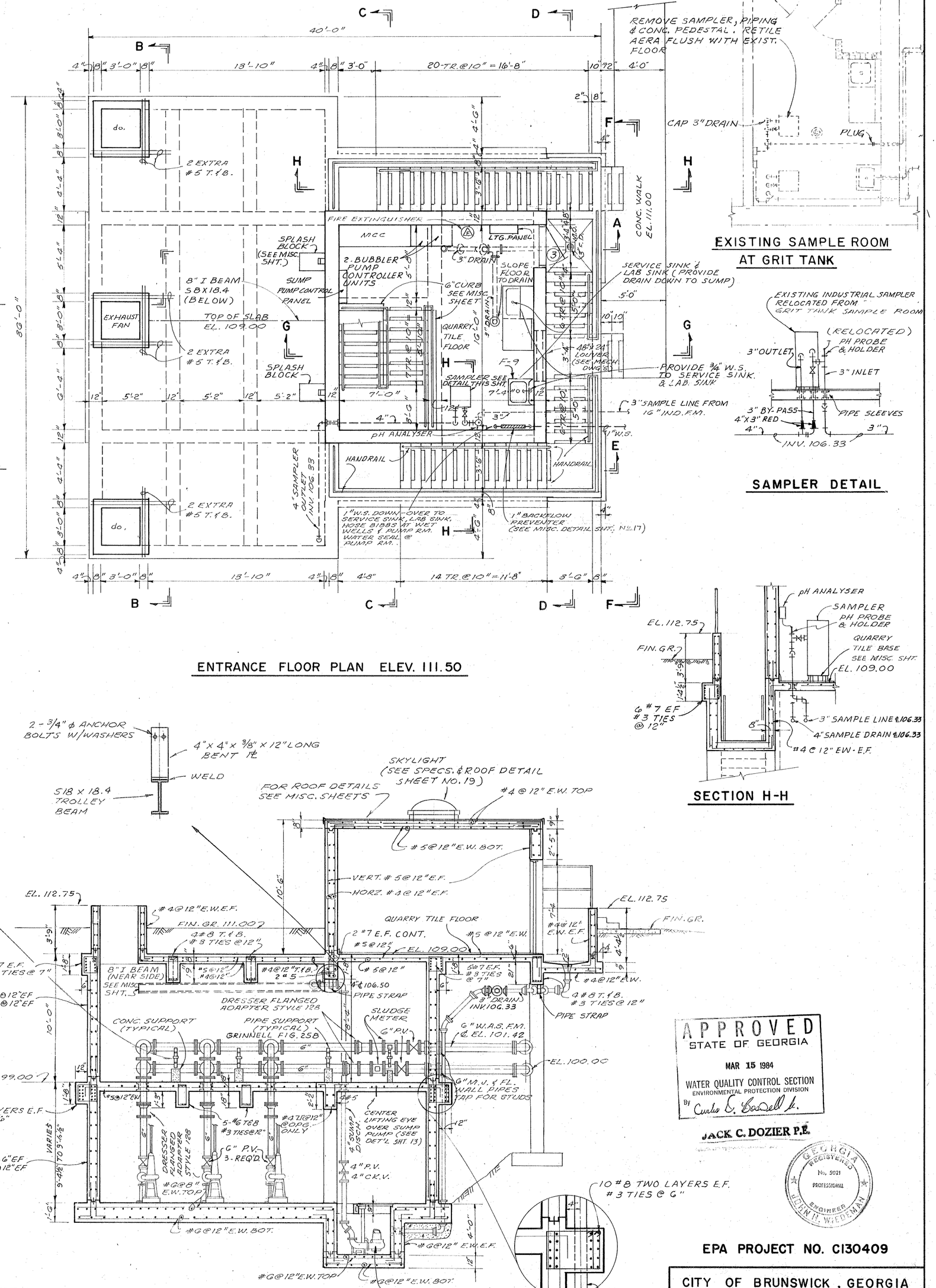

ENTRANCE FLOOR PLAN ELEV. 111.50

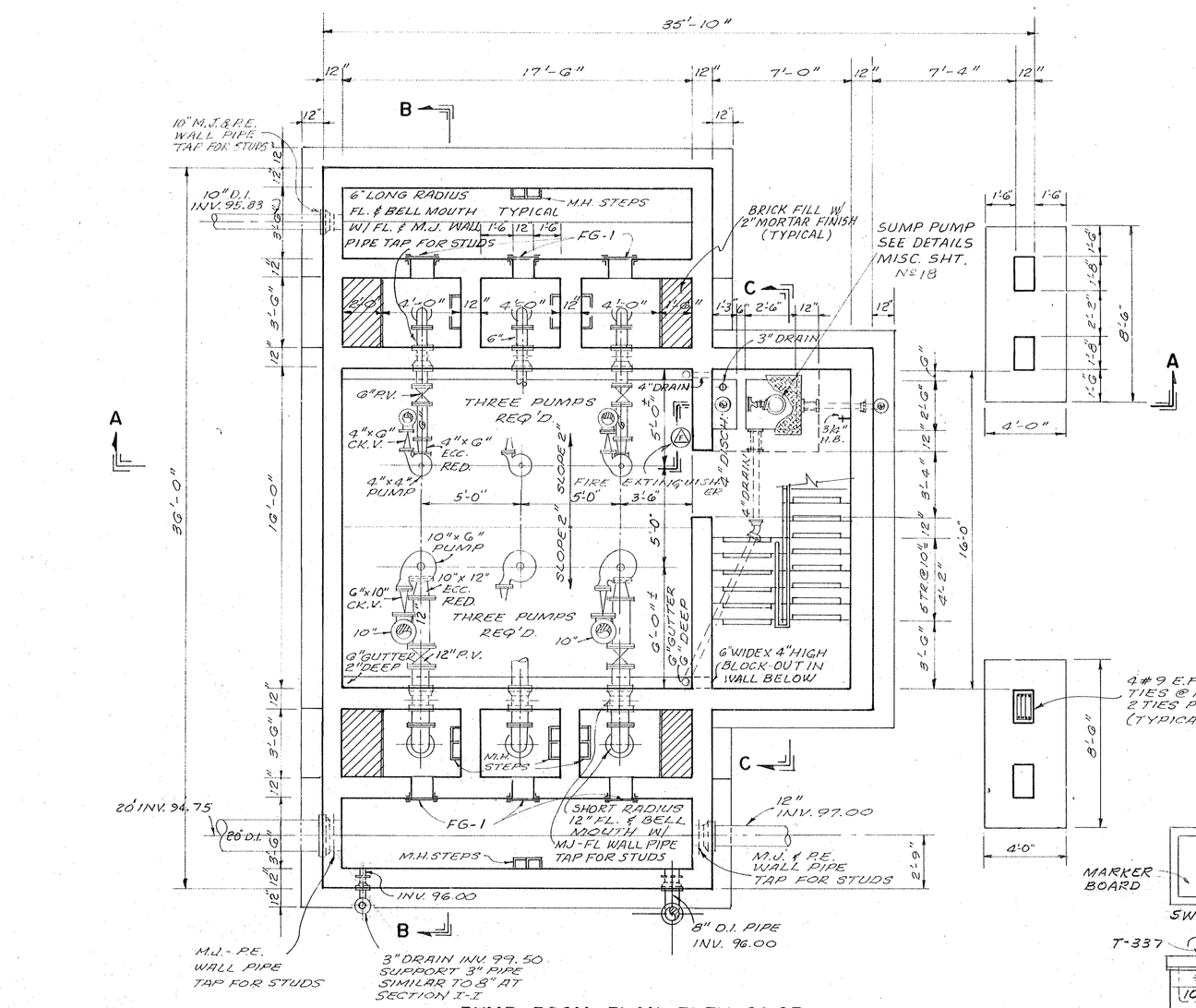

PUMP ROOM PLAN ELEV. 89.63

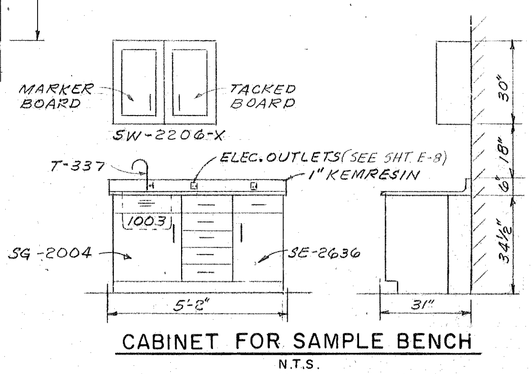

CABINET FOR SAMPLE BENCH
N.T.S.

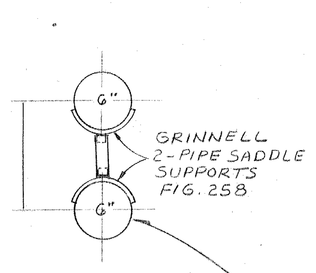

PIPE SUPPORTS

SECTION A-A

SECTION H-H

APPROVED
STATE OF GEORGIA
MAR 15 1984
WATER QUALITY CONTROL SECTION
ENVIRONMENTAL PROTECTION DIVISION
By Curtis E. Cordell Jr.

JACK C. DOZIER P.E.

GEORGIA REGISTERED No. 5021 PROFESSIONAL ENGINEER HERBERT WIEDEMAN

NOTE:
UNIT NUMBERS REFERENCE KEWAUNEE SCIENTIFIC CATALOG NUMBERS

EPA PROJECT NO. C130409

CITY OF BRUNSWICK, GEORGIA
SEWERAGE SYSTEM IMPROVEMENTS

ACADEMY CREEK PLANT

RECYCLE PUMP STATION

SCALE	WIEDEMAN AND SINGLETON ENGINEERS	SHEET
1/4" = 1'-0"		12
DATE	ATLANTA GEORGIA	OF 39
JAN. 1984		

AP 10473A-B

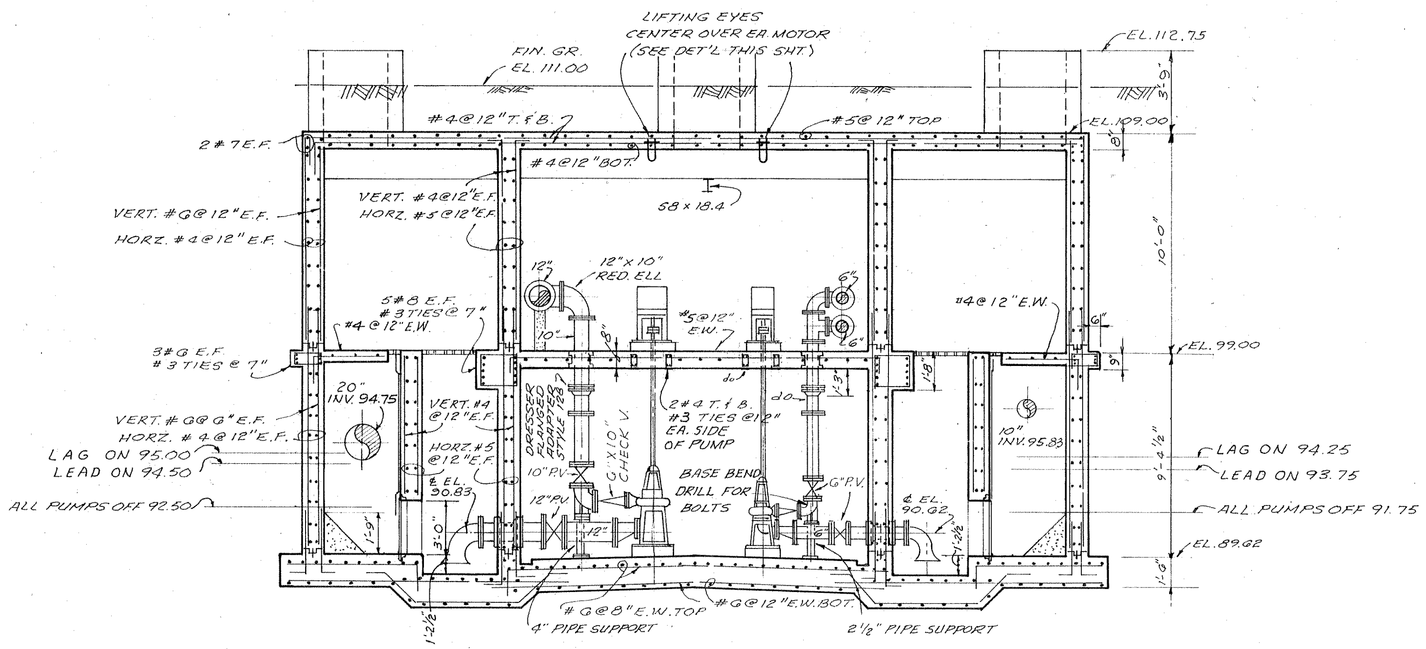

SECTION B–B

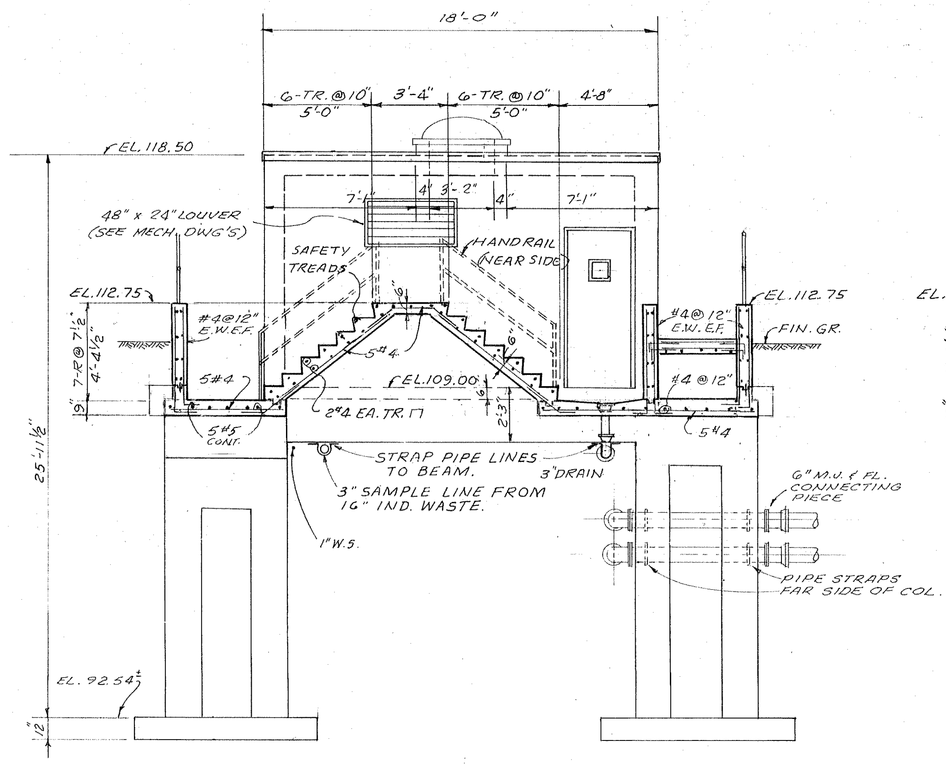

SECTION D–D

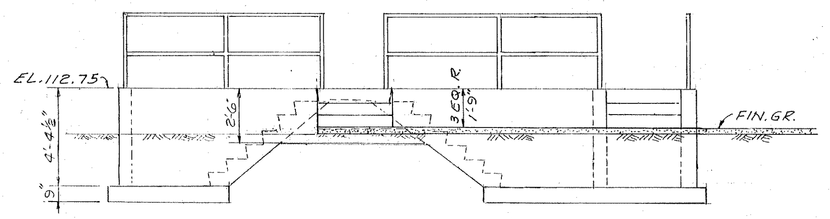

ELEVATION F-F

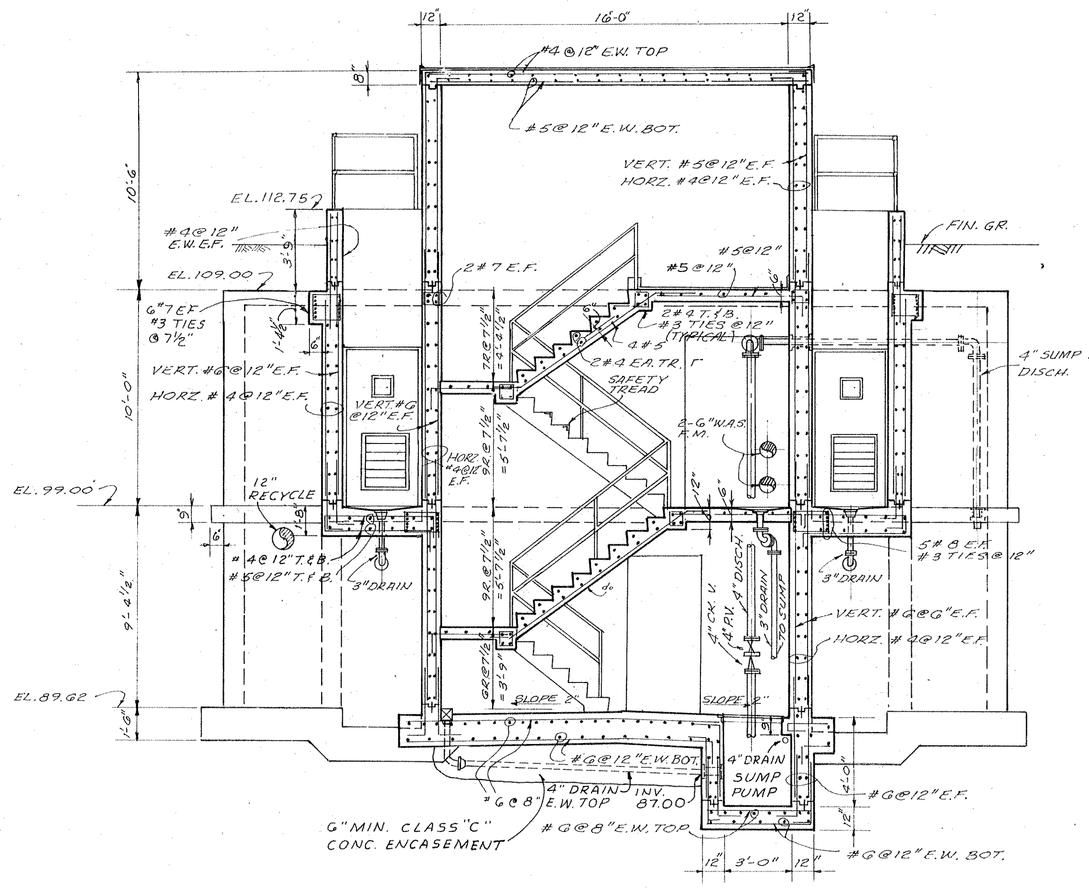

SECTION C–C

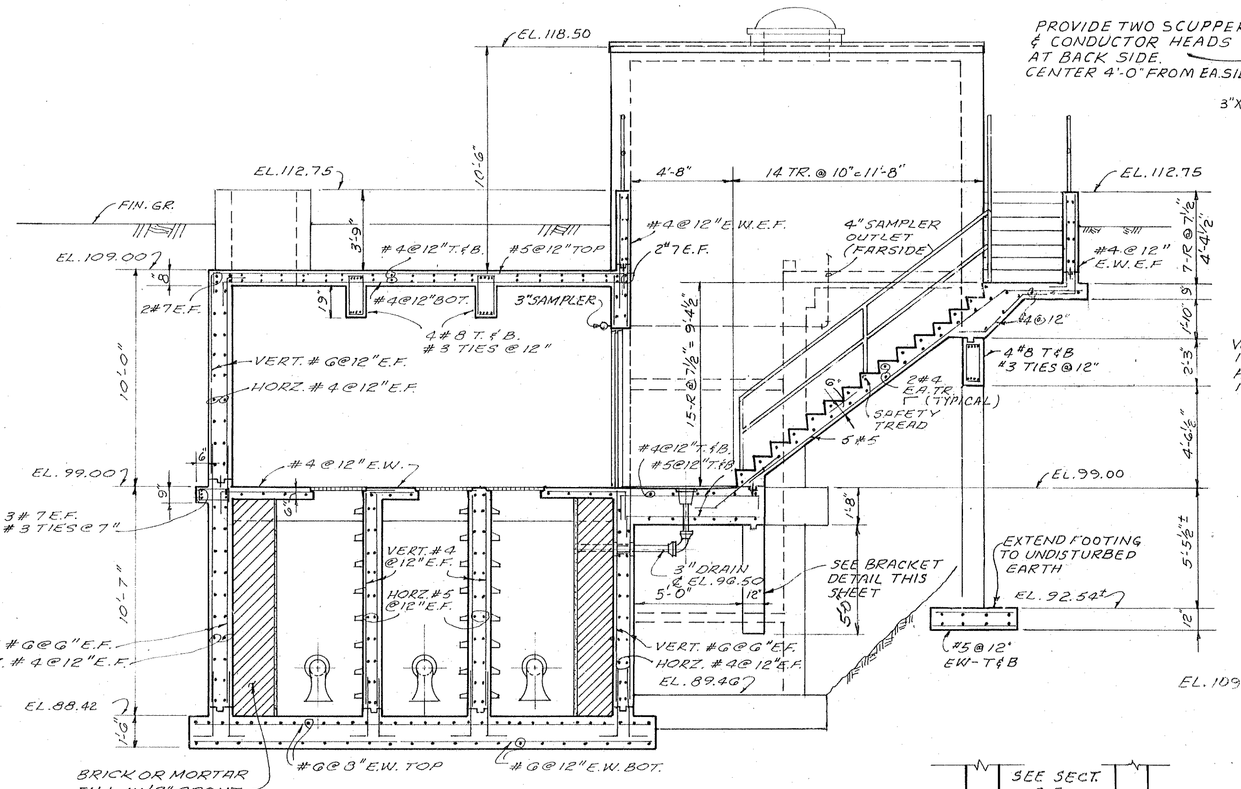

SECTION E–E

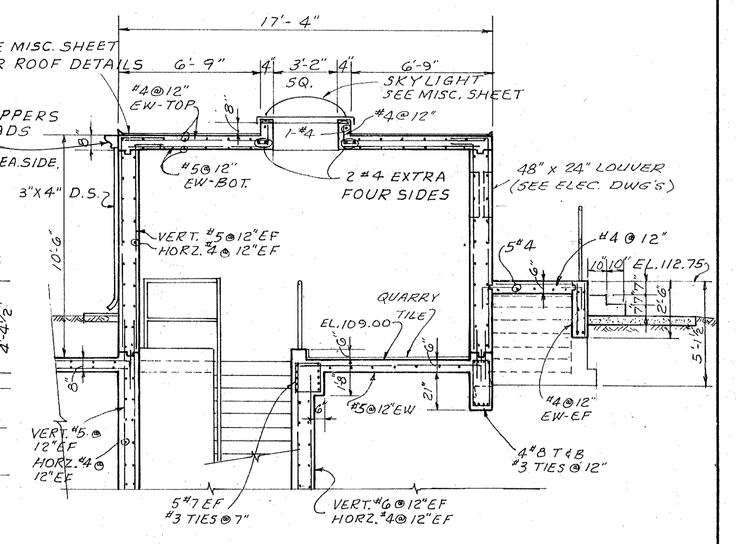

SECTION G–G

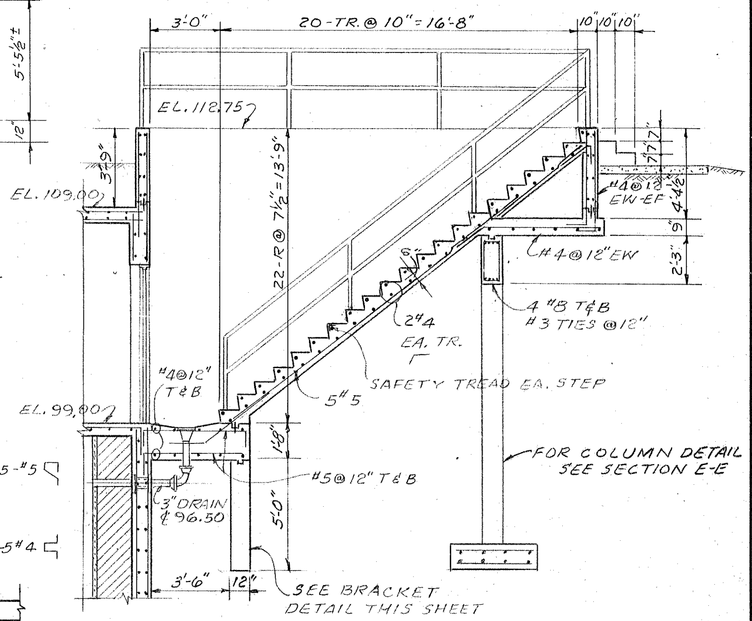

SECTION H–H

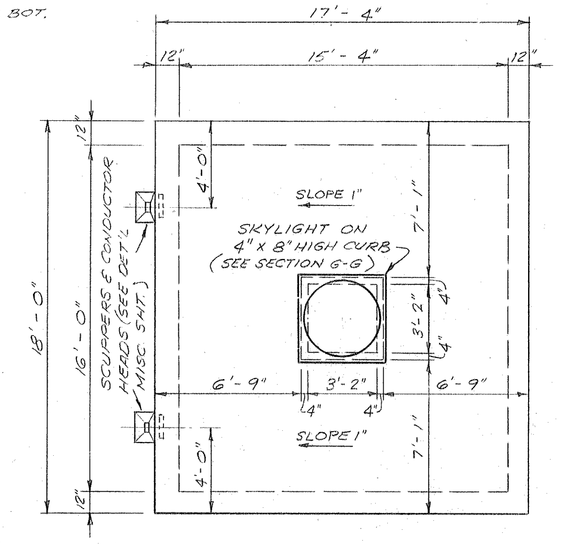

ROOF PLAN

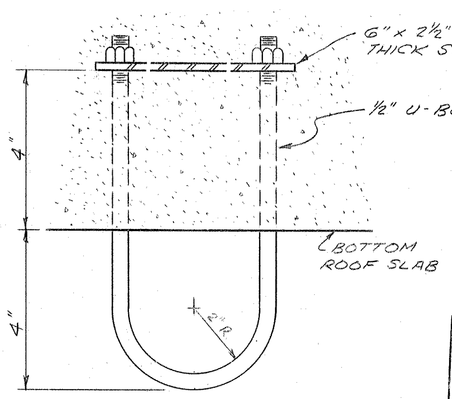

LIFTING EYE DETAIL
N.T.S.

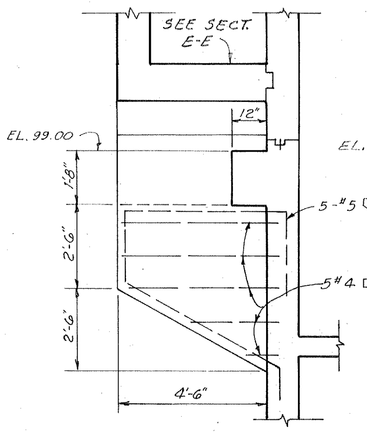

BRACKET DETAIL
N.T.S.

APPROVED
STATE OF GEORGIA
MAR 15 1984
WATER QUALITY CONTROL SECTION
ENVIRONMENTAL PROTECTION DIVISION
by Charles E. Bissell Jr.

JACK C. DOZIER P.E.

GEORGIA REGISTERED No. 5021 PROFESSIONAL ENGINEER H. WIEDEMAN

EPA PROJECT NO. C130409

CITY OF BRUNSWICK, GEORGIA
SEWERAGE SYSTEM IMPROVEMENTS

ACADEMY CREEK PLANT

RECYCLE PUMP STATION

SCALE 1/4"=1'-0"	WIEDEMAN AND SINGLETON ENGINEERS	SHEET 13
DATE JAN. 1984	ATLANTA GEORGIA	OF 39

13

AF 10479A-B

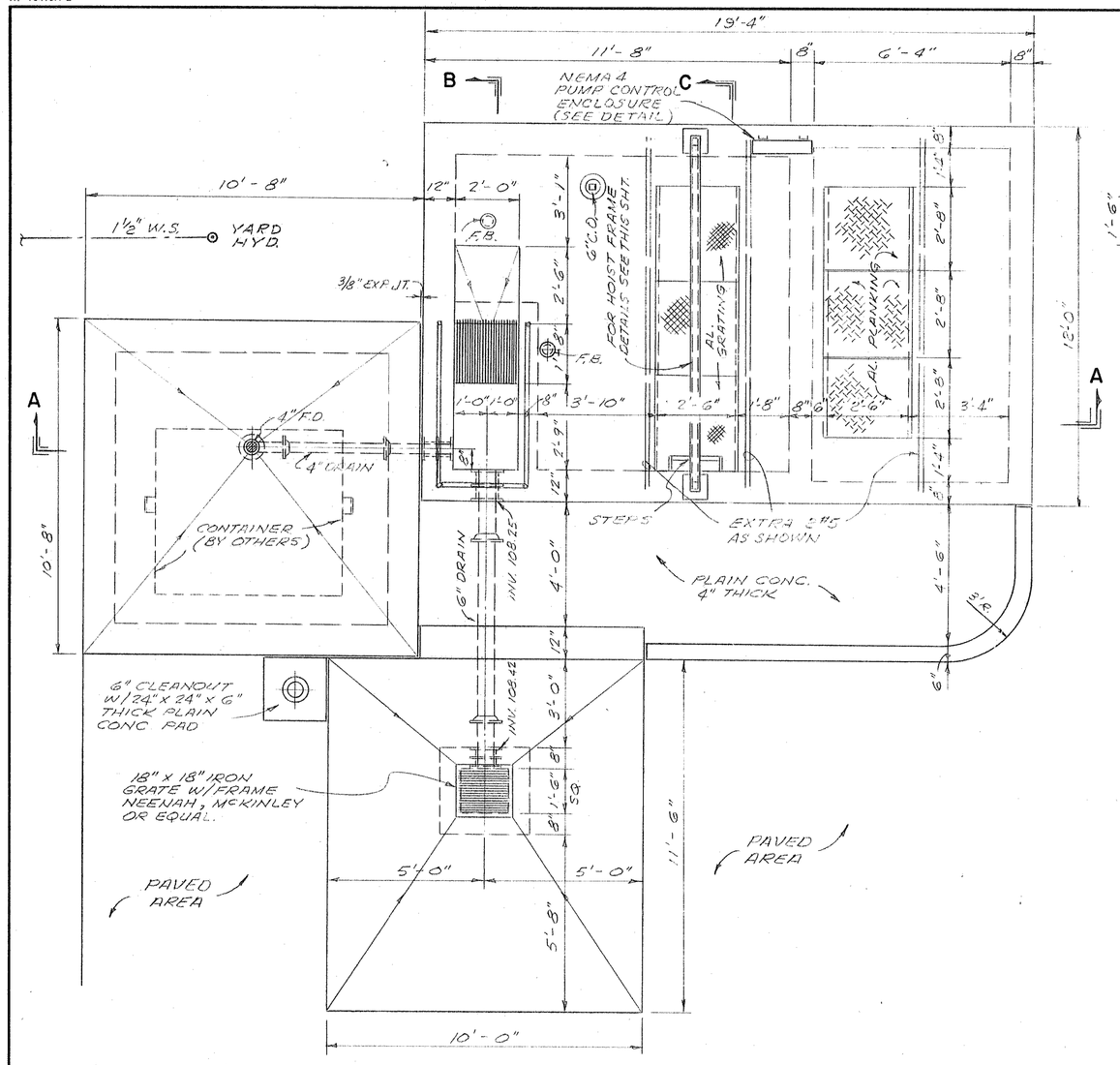

TOP PLAN

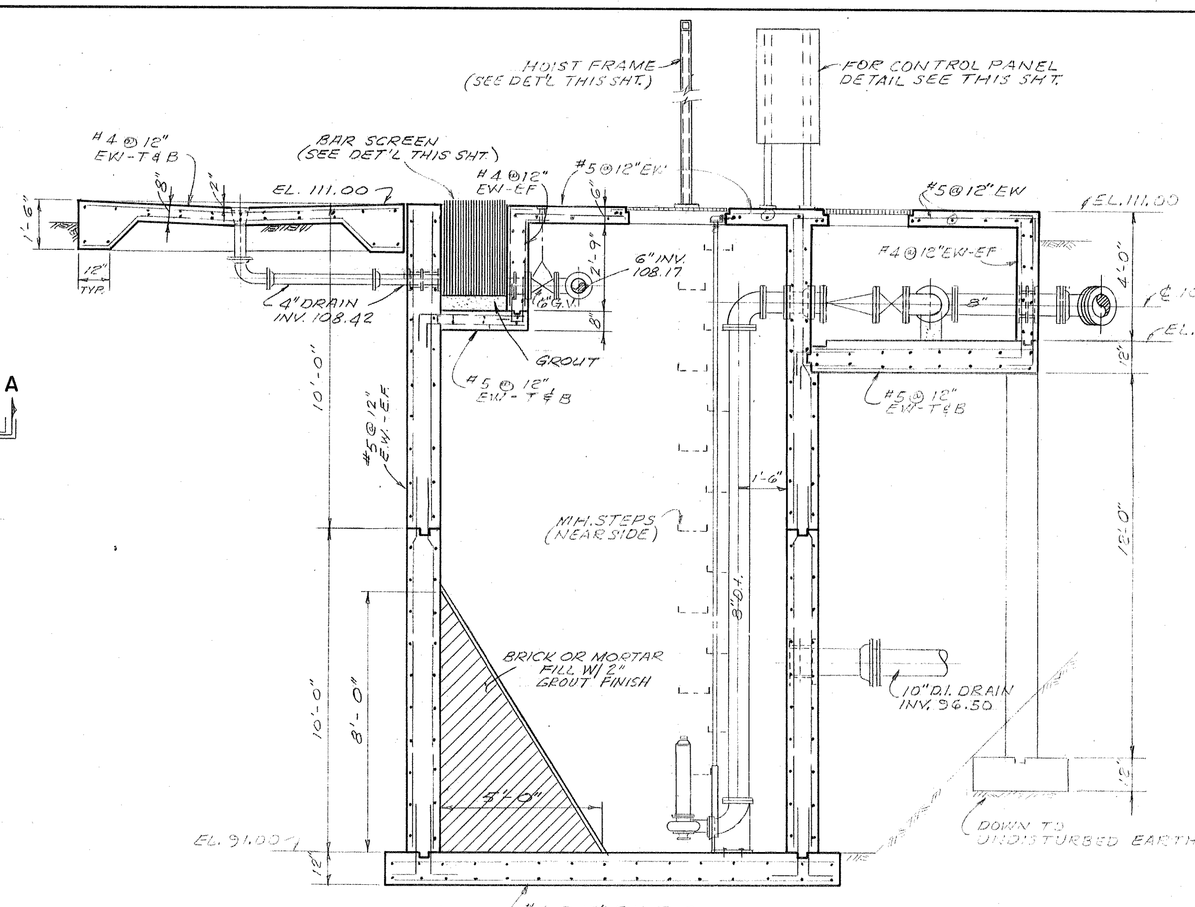

SECTION A-A

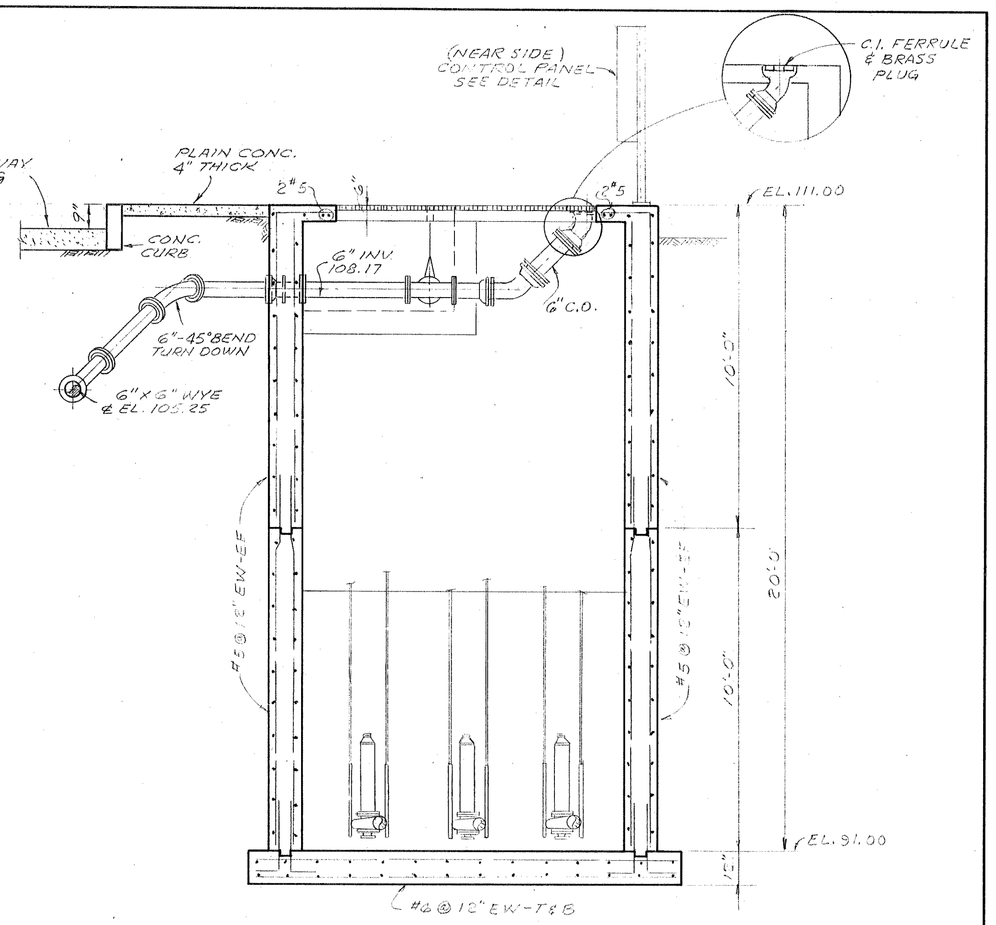

SECTION C-C

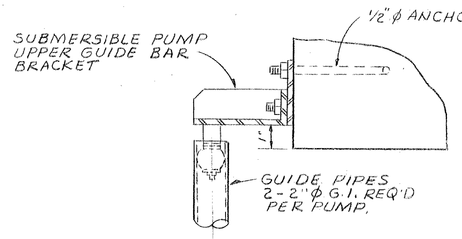

BASE PLATE DETAIL
N.T.S.
(AS PER PUMP MFR. DRAWINGS)

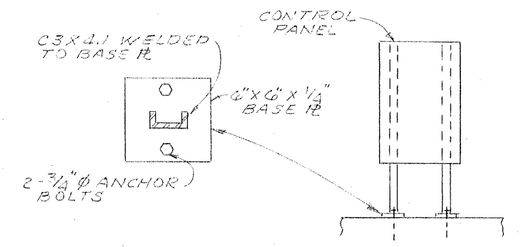

CONTROL PANEL DETAIL
N.T.S.

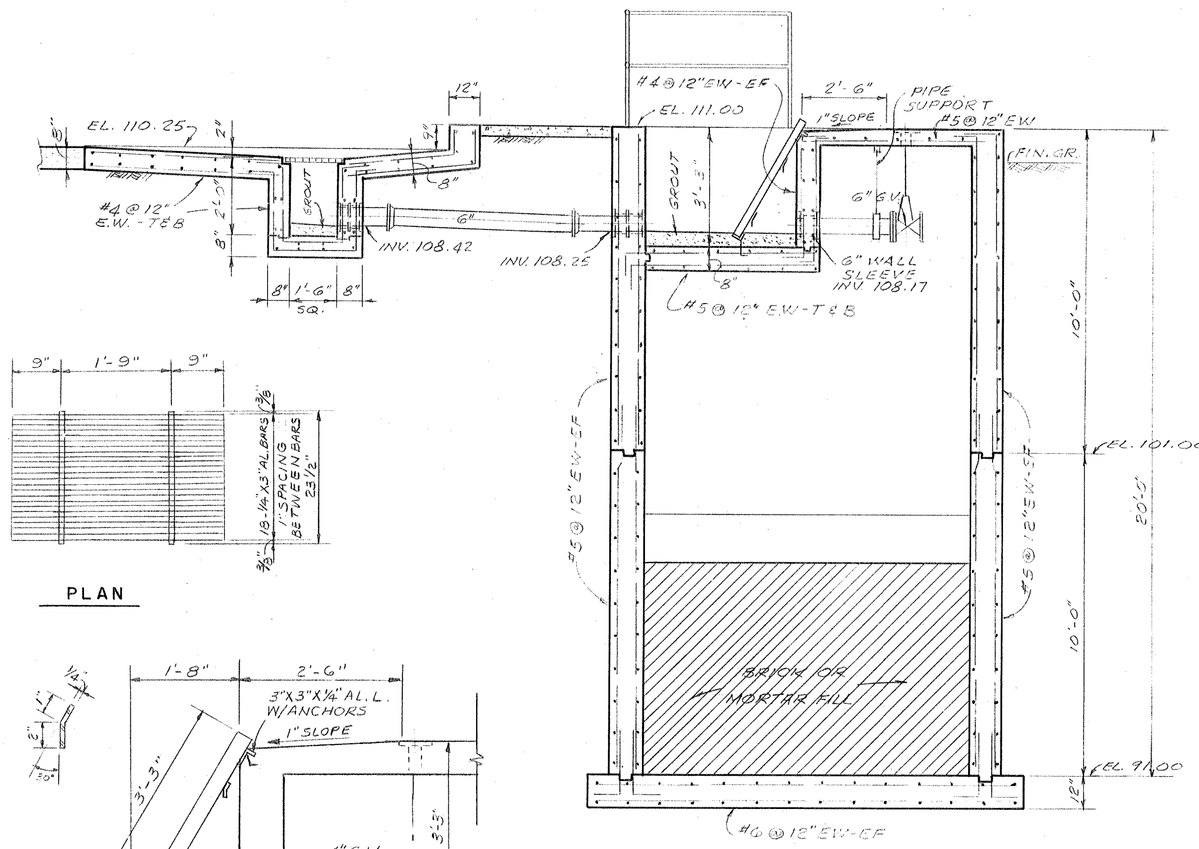

SECTION B-B

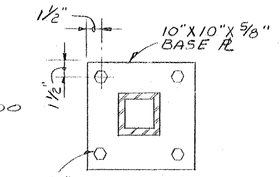

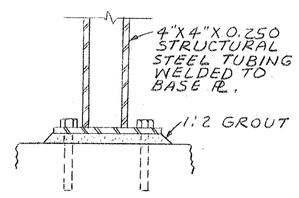

BASE PLATE DETAIL
N.T.S.

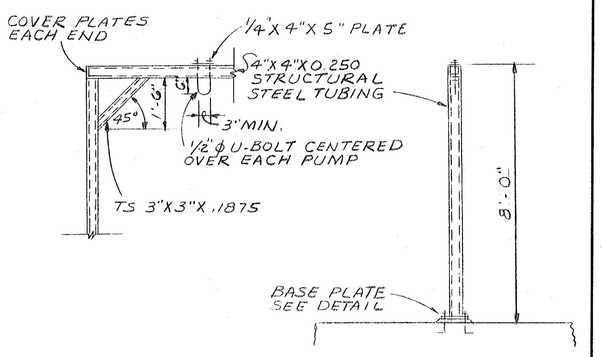

HOIST FRAME DETAIL
N.T.S.

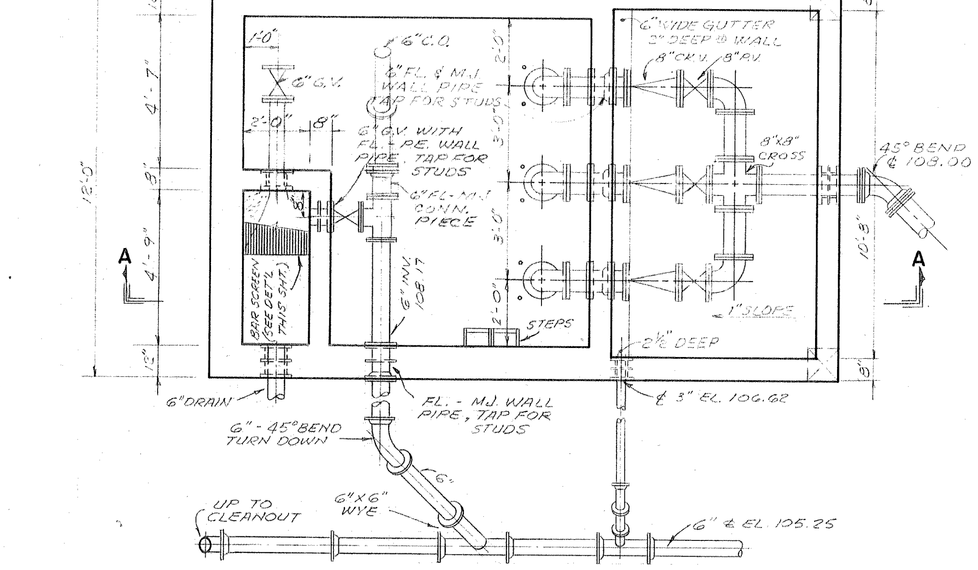

WALL PLAN

PLAN

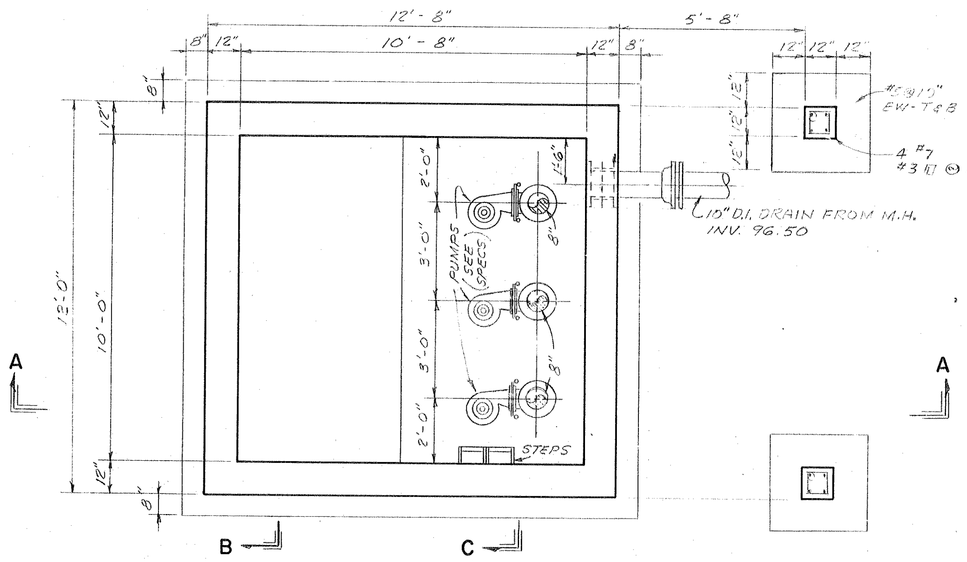

BOTTOM PLAN

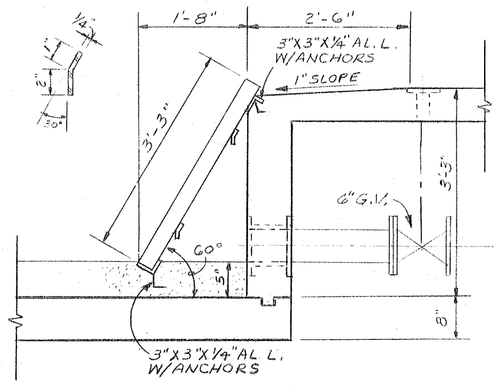

SECTION

BAR SCREEN DETAIL-ALUMINUM
N.T.S.

APPROVED
STATE OF GEORGIA
MAR 15 1984
WATER QUALITY CONTROL SECTION
ENVIRONMENTAL PROTECTION DIVISION
By Curtis C. Dozier Jr.

JACK C. DOZIER P.E.

GEORGIA REGISTERED No. 5071 PROFESSIONAL ENGINEER JOHN H. WIEDEMAN

EPA PROJECT NO. C130409

CITY OF BRUNSWICK, GEORGIA
SEWERAGE SYSTEM IMPROVEMENTS

ACADEMY CREEK PLANT
SEPTIC WASTE DUMP STATION

SCALE	WIEDEMAN AND SINGLETON ENGINEERS	SHEET
3/8"=1'-0"		14
DATE	ATLANTA GEORGIA	OF 39
OCT. 1983		

AF 10479A-B

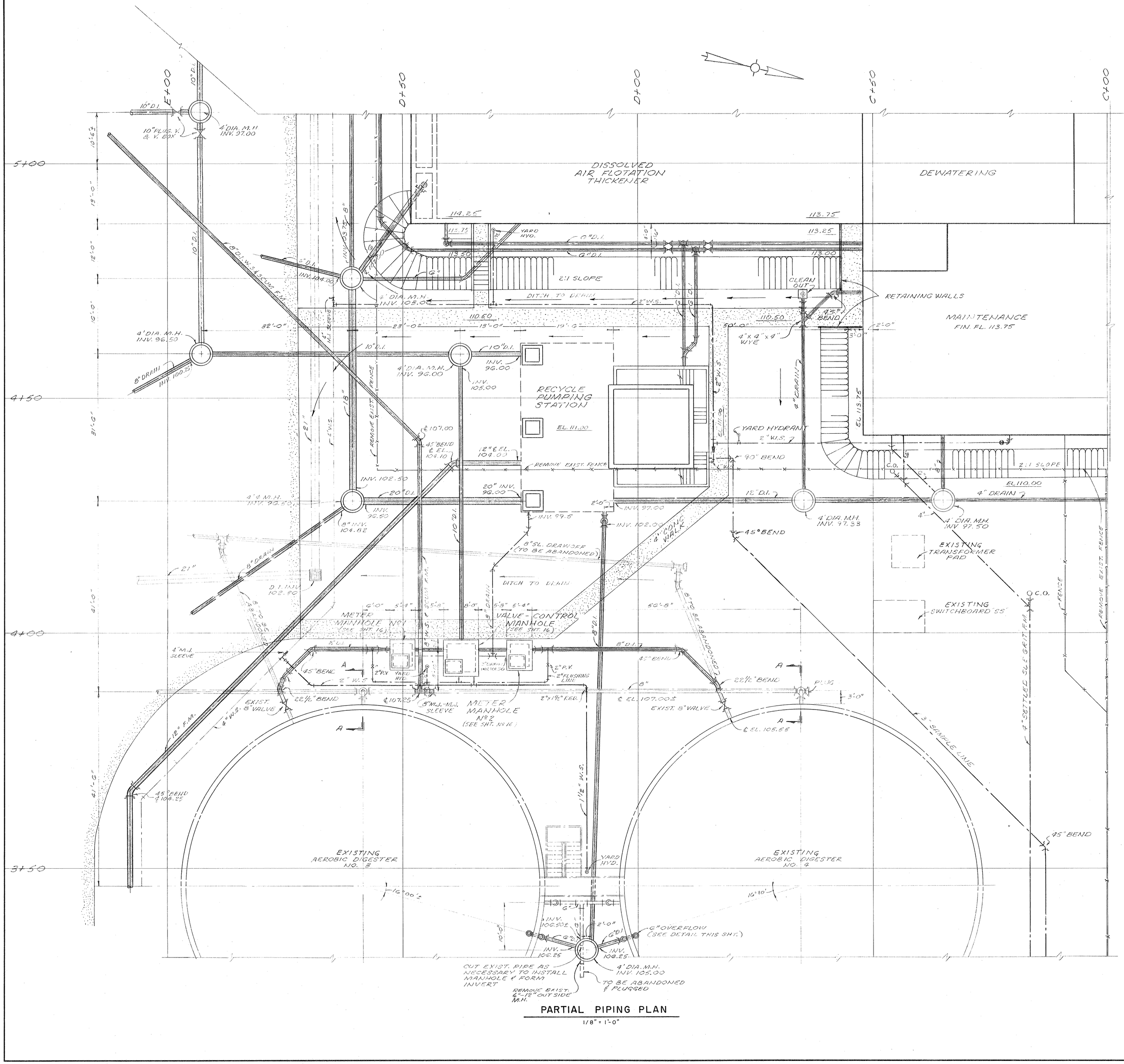

PARTIAL PIPING PLAN

1/8" = 1'-0"

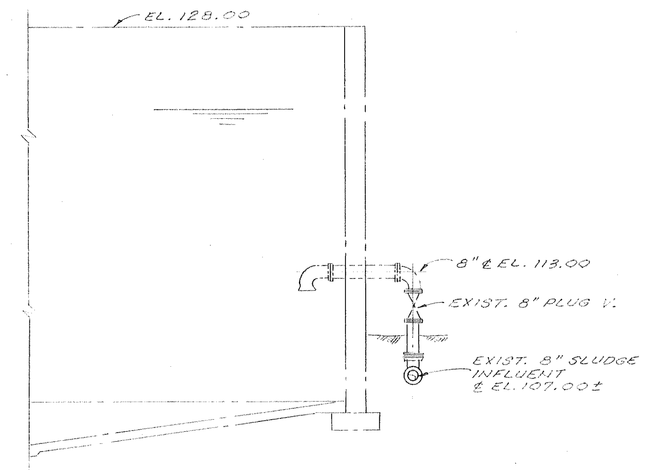

SECTION A-A

3/16" = 1'-0"

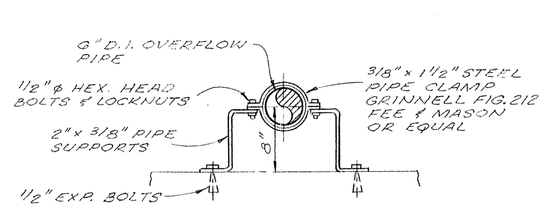

PIPE SUPPORT DETAIL

N.T.S.

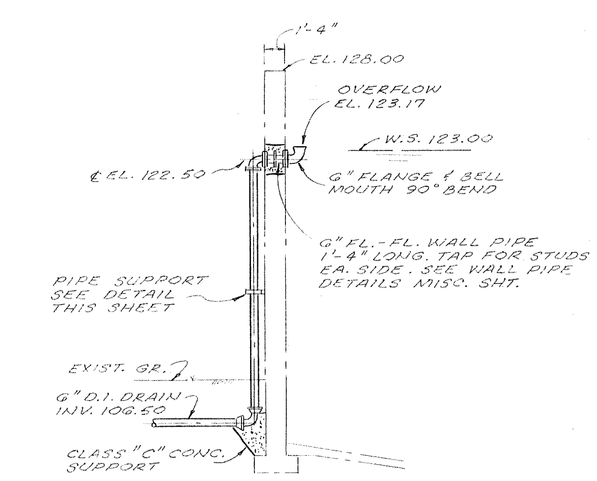

OVERFLOW DETAIL

3/16" = 1'-0"

APPROVED
STATE OF GEORGIA
MAR 15 1984
WATER QUALITY CONTROL SECTION
ENVIRONMENTAL PROTECTION DIVISION
By Curtis E. Bardell Jr.

JACK C. DOZIER P.E.

GEORGIA REGISTERED No. 5021 PROFESSIONAL ENGINEER JACK C. DOZIER

EPA PROJECT NO. C130409

CITY OF BRUNSWICK, GEORGIA
SEWERAGE SYSTEM IMPROVEMENTS

ACADEMY CREEK PLANT

PARTIAL PIPING PLAN & DETAILS

SCALE	WIEDEMAN AND SINGLETON ENGINEERS	SHEET
AS SHOWN	ATLANTA GEORGIA	15
DATE JAN. 1984		OF 39

A.P. 10479A+B

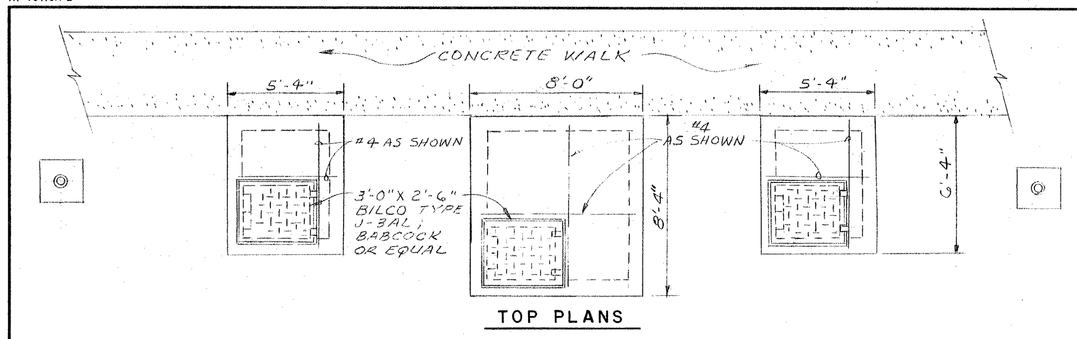

TOP PLANS

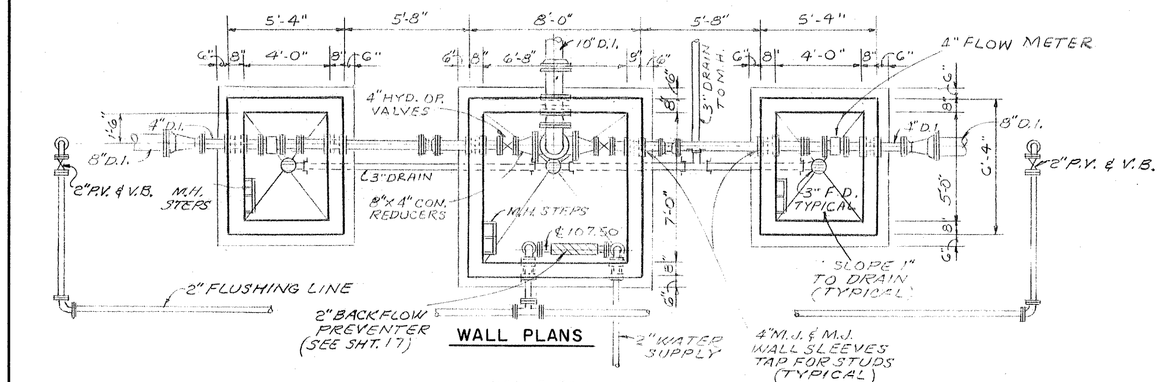

WALL PLANS

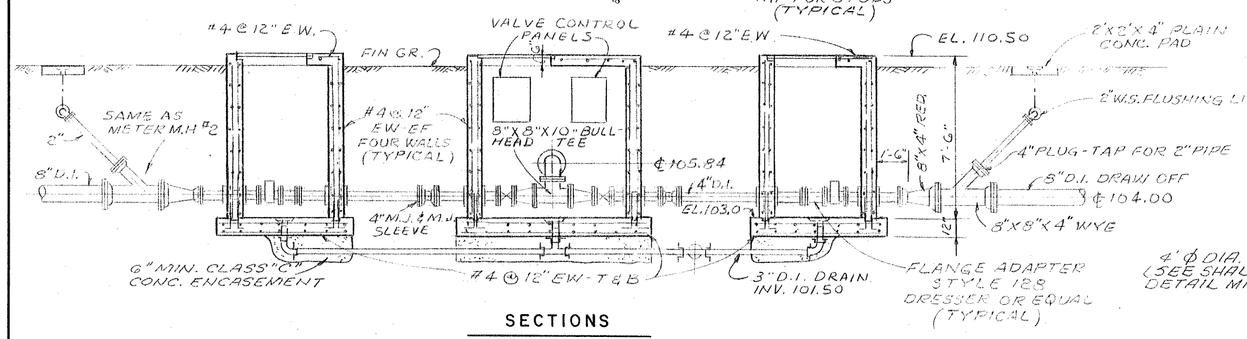

SECTIONS

METER M.H. NO. 1 | VALVE CONTROL M.H. | METER M.H. NO. 2

1/4" = 1'-0"

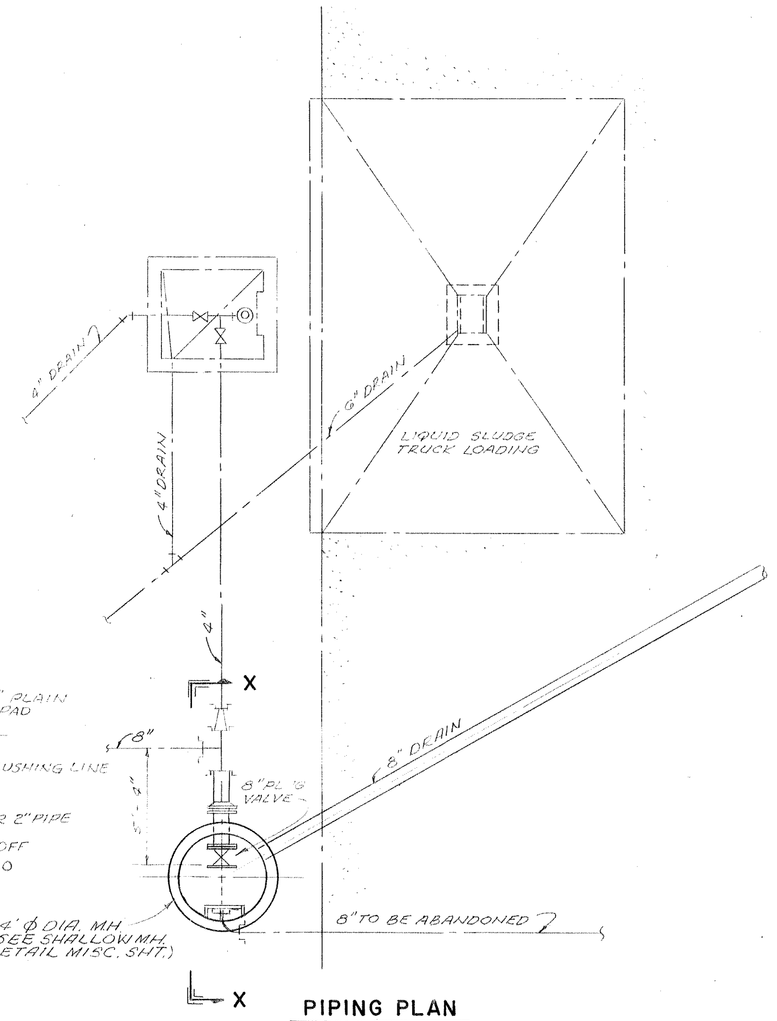

PIPING PLAN

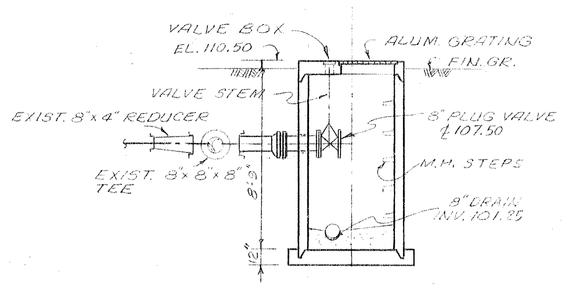

SECTION X-X

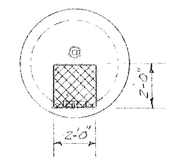

TOP PLAN

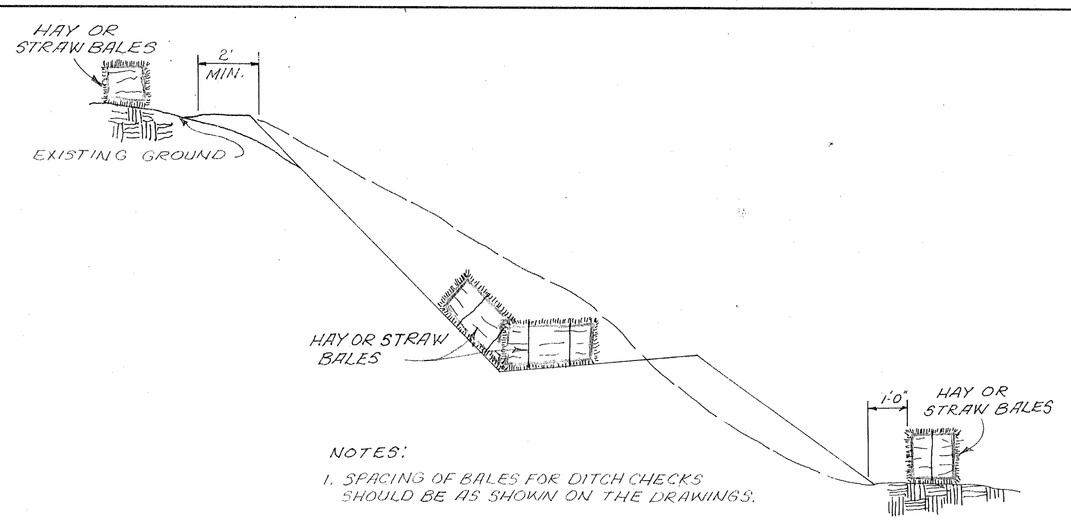

NOTES:

1. SPACING OF BALES FOR DITCH CHECKS SHOULD BE AS SHOWN ON THE DRAWINGS.
2. ANCHORS WILL BE NECESSARY ONLY ON SLOPES GREATER THAN 40%, AND SHALL CONSIST OF (2) TWO 1"x2"x30" WOODEN STAKES, DRIVEN THROUGH THE BALES.

HAY OR STRAW BALES SECTIONS

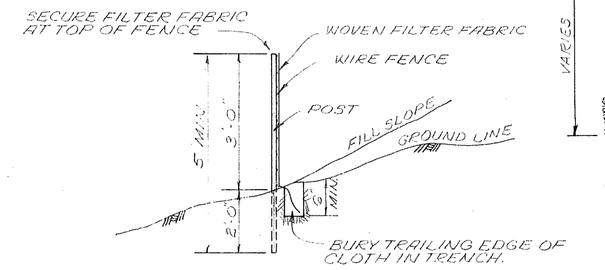

SECTION THRU FENCE

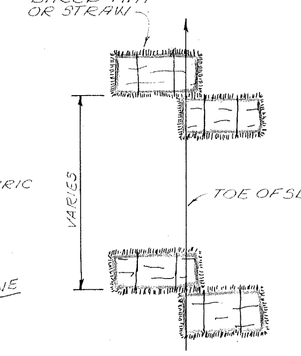

PLAN AT DITCH CHECKS

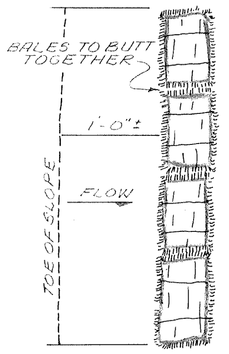

PLAN AT TOE OF FILL

HAY OR STRAW BALE DETAILS

N.T.S.

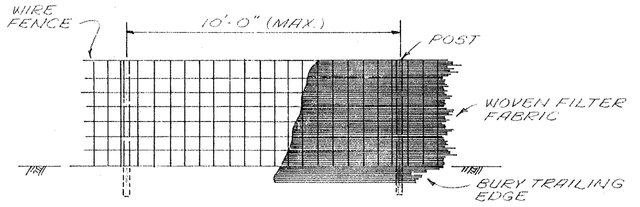

ELEVATION AT FENCE

SILT FENCE DETAILS

N.T.S.

ANCHOR BALES WITH (2) 1"x2"x30" WOODEN STAKES EA. BALE.

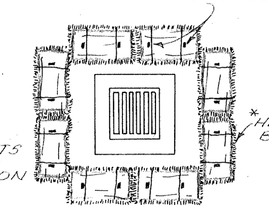

NOTE: AT ALL DROP INLETS EXIST. AND PROPOSED PROVIDE SEDIMENTATION CONTROL AS REQ'D.

* WIRE BALES TOGETHER ON PAVED AREAS.

DETAIL AT DRAINAGE STRUCTURES

N.T.S.

TOP PLAN

PIPING MODIFICATIONS AT LIQUID SLUDGE TRUCK LOADING

1/4" = 1'-0"

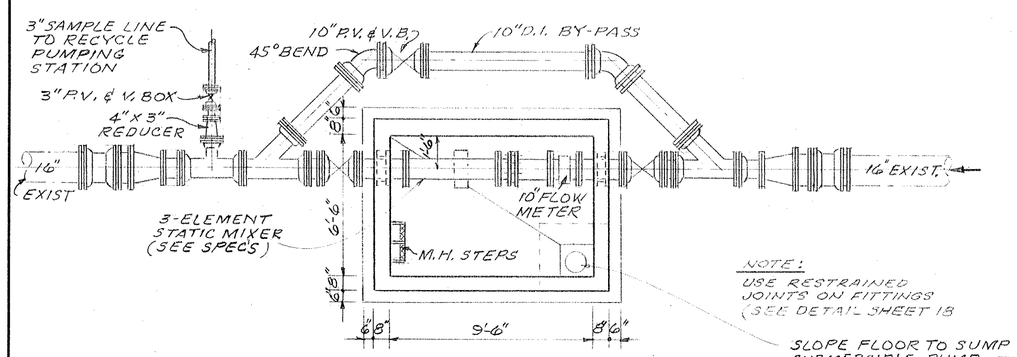

WALL PLAN

NOTE: USE RESTRAINED JOINTS ON FITTINGS (SEE DETAIL SHEET 18

SLOPE FLOOR TO SUMP SUBMERSIBLE PUMP (SEE DETAIL THIS SHEET)

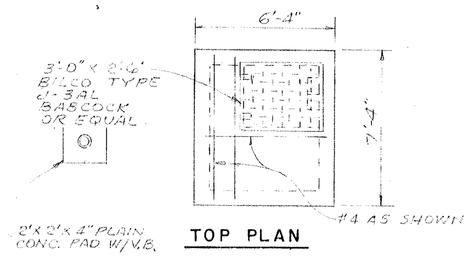

TOP PLAN

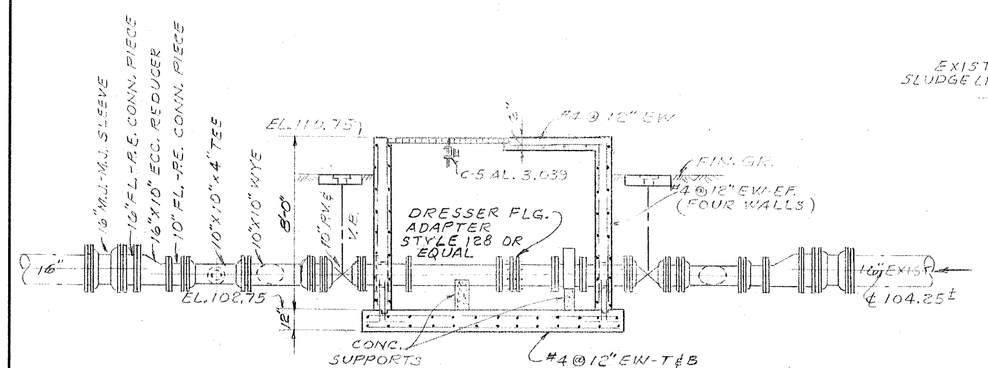

SECTION

METER MANHOLE NO. 3

1/4" = 1'-0"

NOTE: PAINT ALL OUTSIDE FLANGE FITTINGS WITH BITUMASTIC

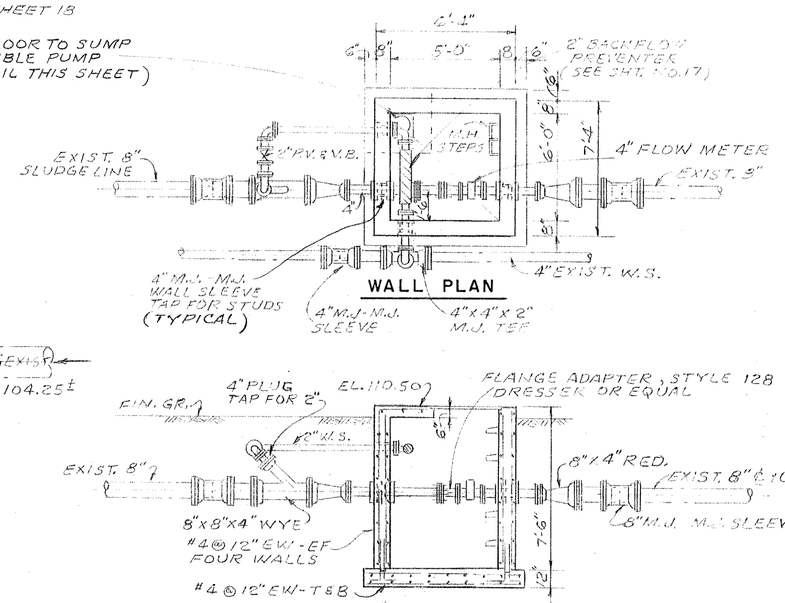

SECTION

METER MANHOLE NO. 4

1/4" = 1'-0"

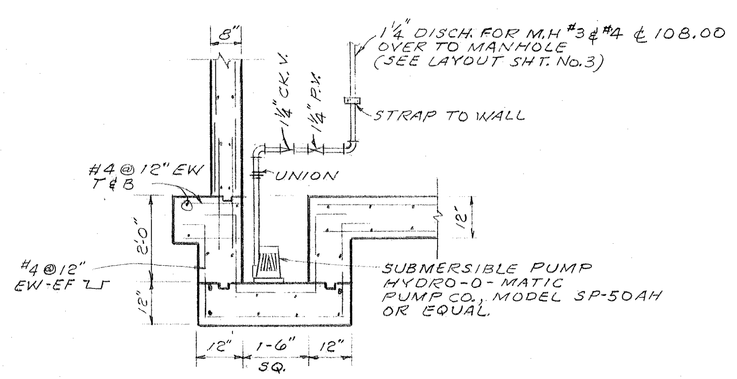

SUMP PUMP DETAIL

N.T.S.

APPROVED
STATE OF GEORGIA
MAR 15 1984
WATER QUALITY CONTROL SECTION
ENVIRONMENTAL PROTECTION DIVISION
By Curtis E. Cadwell Jr.

JACK C. DOZIER P.E.

GEORGIA REGISTERED No. 5121 PROFESSIONAL ENGINEER JOHN H. WIEDEMAN

EPA PROJECT NO. C130409

CITY OF BRUNSWICK, GEORGIA
SEWERAGE SYSTEM IMPROVEMENTS

ACADEMY CREEK PLANT

MISCELLANEOUS STRUCTURES
SEDIMENTATION CONTROL

SCALE		SHEET
AS SHOWN	WIEDEMAN AND SINGLETON ENGINEERS	16
DATE		OF 39
JAN. 1984	ATLANTA GEORGIA	

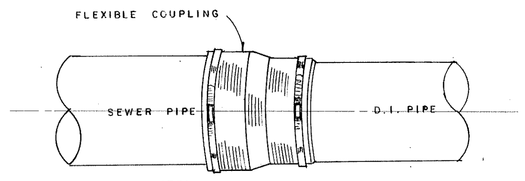

NOTE:
(1.) CONTRACTOR TO USE COUPLING AS RECOMMENDED BY MFG. IN JOINTING UNLIKE TYPES OF PIPE.
(2.) CONTRACTOR TO USE FLEXIBLE COUPLING IN LIEU OF CONC. COLLAR, PIPE SIZES 6" THRU 15"

TYPICAL DETAIL – FLEXIBLE COUPLING FOR JOINTING D.I. PIPE TO SEWER PIPE

N.T.S.

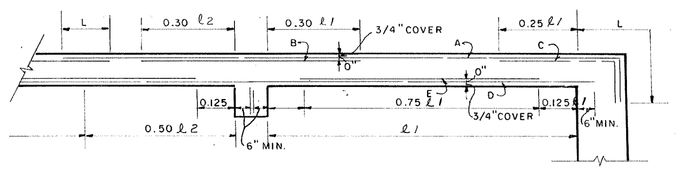

DOUBLE OR SINGLE MAT SLAB

TYPICAL ROOF AND FLOOR SLAB REINFORCING

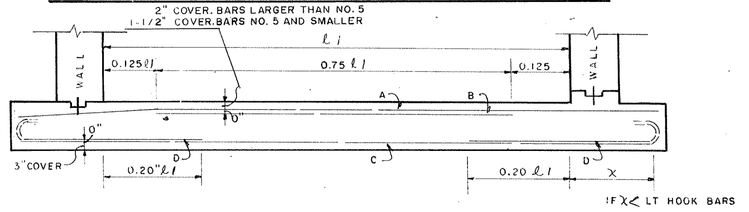

FLAT BOTTOM SLAB

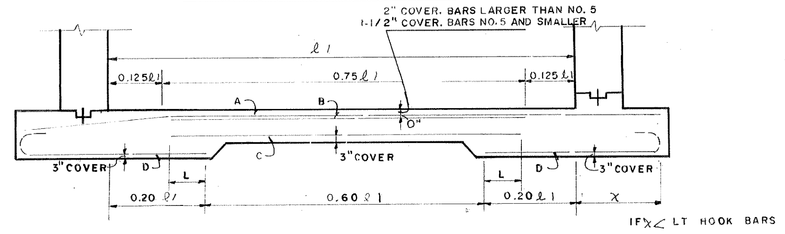

DROP EDGE BOTTOM SLAB

TYPICAL BOTTOM SLAB REINFORCING

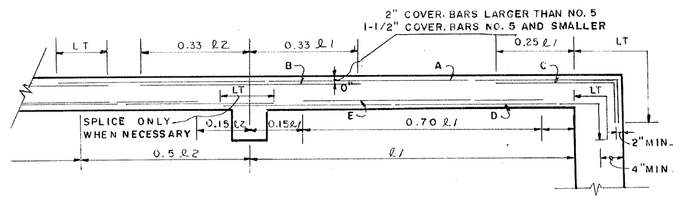

TYPICAL BEAM REINFORCING

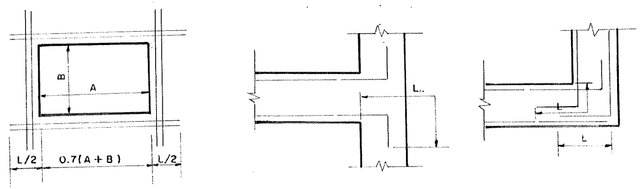

TYPICAL FOR HORIZONTAL BARS

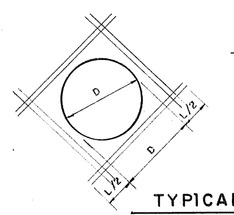

NOTE:
PROVIDE EXTRA BARS IN EACH MAT ON 4 SIDES OF OPENINGS 12-INCHES AND LARGER. BARS SHALL BE SAME SIZE AS LARGEST BAR. NUMBER OF BARS IN EACH FACE SHALL BE EQUAL TO THE NUMBER OF BARS INTERRUPTED EXCEPT MINIMUM SHALL BE TWO AS SHOWN.

TYPICAL FOR OPENING.

TYPICAL REINFORCING DETAILS

N.T.S.

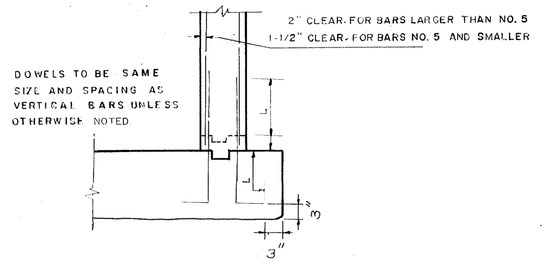

TYPICAL FOR DOWELS

fs = 60,000 lbs/sq. in. fc = 3,000 lbs/sq. in.

BAR SIZE	LAP (INCHES) L	LT
# 3	12	12
# 4	12	12
# 5	12	14
# 6	13	18
# 7	18	25
# 8	23	32
# 9	30	41
# 10	37	52
# 11	46	64

BAR LAP SCHEDULE

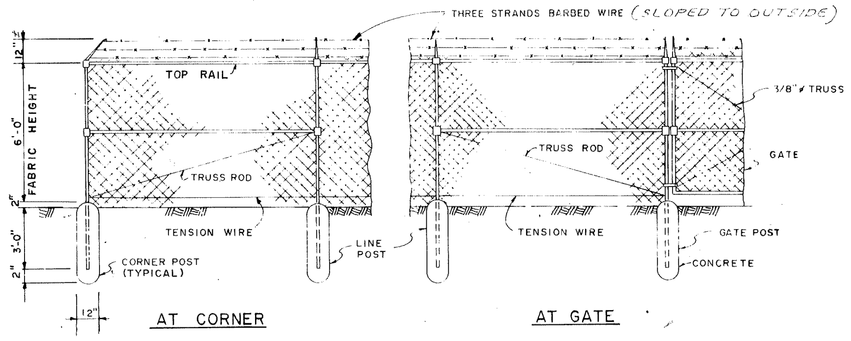

AT CORNER AT GATE

FENCE DETAIL

N.T.S.

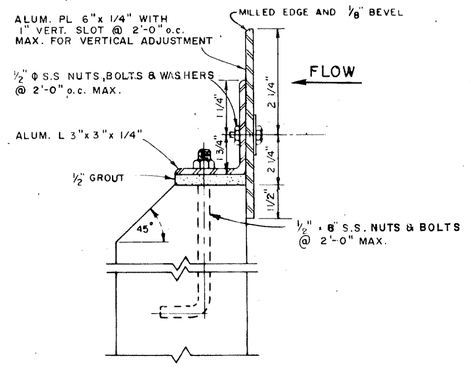

WEIR DETAIL

N.T.S.

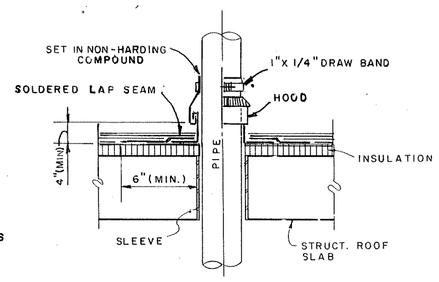

FLASHING AT PIPING THROUGH ROOF

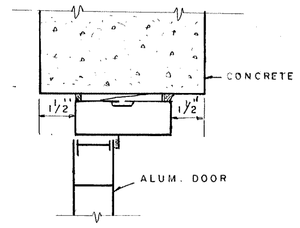

DOOR HEAD

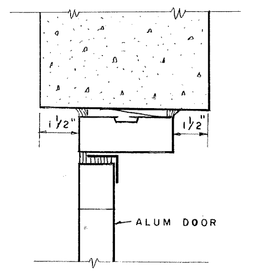

DOOR JAMB

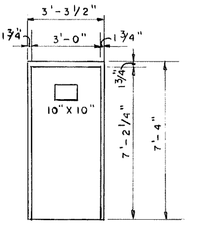

DOOR ELEVATION

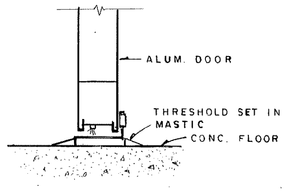

DOOR SILL

DOOR DETAILS

N.T.S.

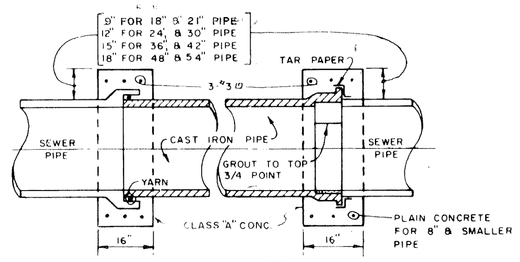

TYPICAL DETAIL SQ. CONC. COLLAR FOR JOINING D.I. PIPE TO SEWER PIPE

CONC. COLLAR TO BE USED FOR 18" & LARGER PIPE

N.T.S.

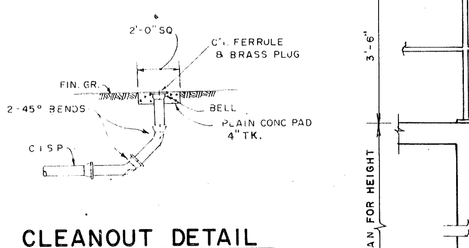

CLEANOUT DETAIL

N.T.S.

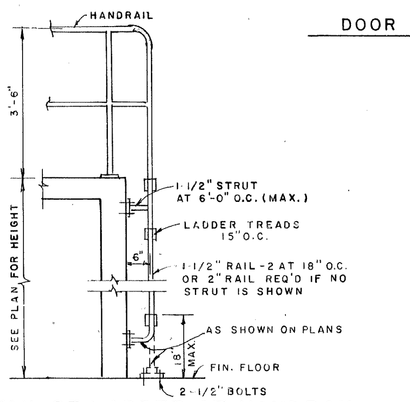

DETAIL OF LADDER AT HANDRAIL

N.T.S.

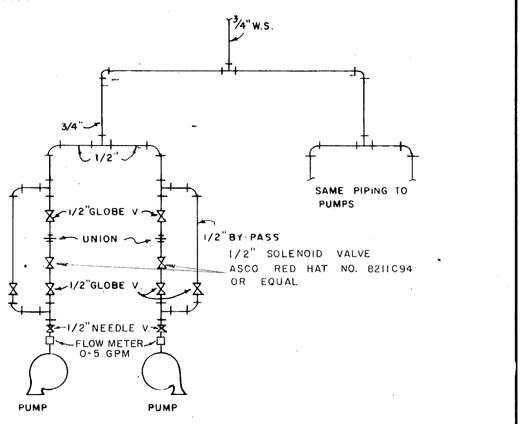

DETAILS-WATER SEAL PIPING AT PUMPS

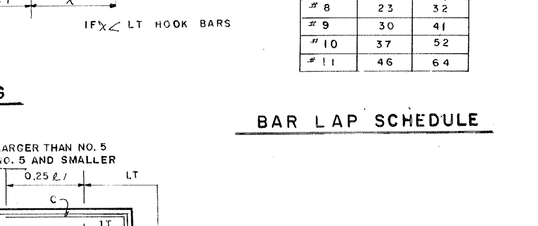

TYPE "A" HEADWALL

N.T.S.

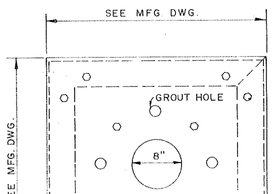

PLAN

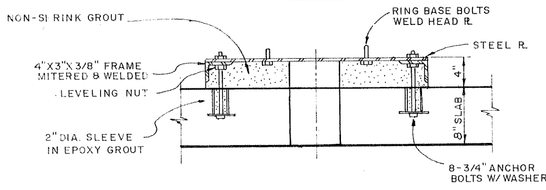

SECTION - PROPOSED SLAB

PUMP MOTOR BASE & CURB RING

(SL. RETURN PUMP STA. & RECYCLE PUMP STA.)

N.T.S.

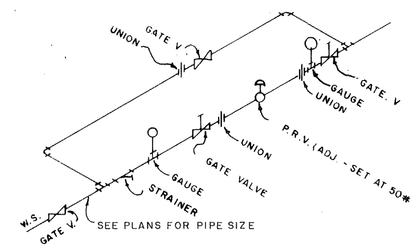

DETAIL OF PRESSURE REDUCING VALVE ASSEMBLY

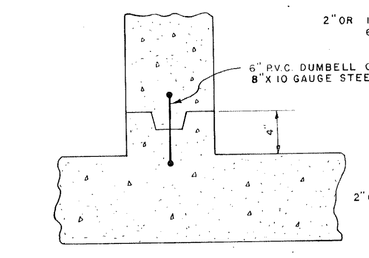

WATERSTOP DETAIL

N.T.S.

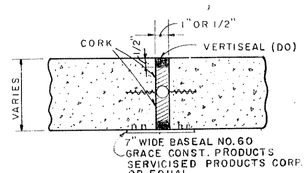

SLABS ON GRADE

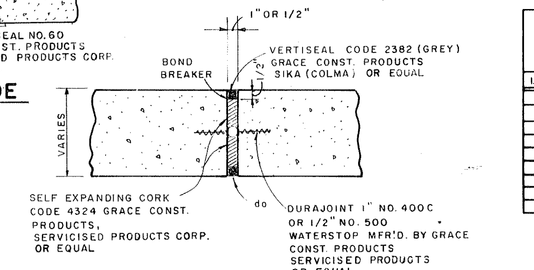

EXPANSION JOINT DETAIL AT WALLS

(UNLESS SHOWN OTHERWISE ON DRAWINGS)

N.T.S.

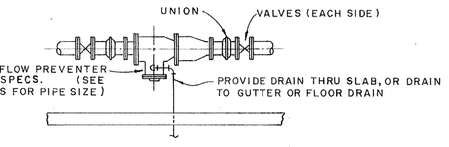

TYPICAL BACKFLOW PREVENTER DETAIL

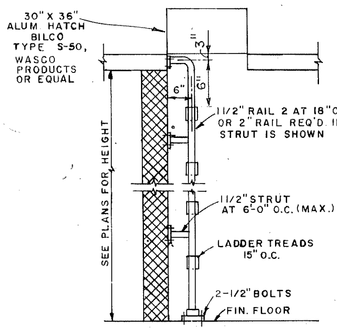

LADDER TREAD DETAIL

N.T.S.

DETAIL OF LADDER AT ACCESS HATCH

N.T.S.

SCHEDULE
GOVERNING DIMENSIONS
CONCRETE PIERS

I.D. PIPE	"A"	"B"	"C"
8"	11 1/2"	2"	6 3/4"
10"	13 1/2"	2 1/2"	5 3/4"
12"	15 1/2"	3"	5 3/4"
16"	19"	4"	8"
20"	23"	5"	10"
24"	26"	6"	10"
30"	32"	7 1/2"	10"
36"	38"	9"	10"
42"	46"	11 1/2"	10"

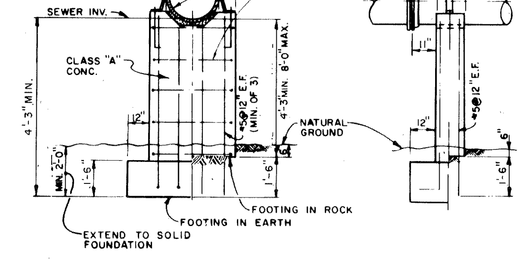

CONCRETE PIER DETAIL

N.T.S.

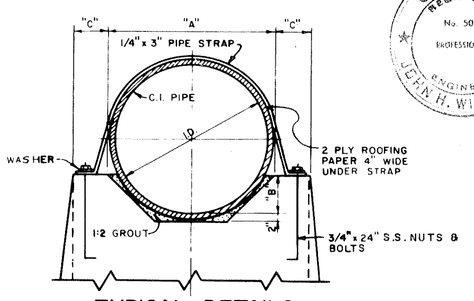

TYPICAL DETAILS CONCRETE PIER SADDLES

GEORGIA REGISTERED No. 5021 PROFESSIONAL ENGINEER JOHN H. WIEDEMAN

APPROVED
STATE OF GEORGIA
MAR 15 1984
WATER QUALITY CONTROL SECTION
ENVIRONMENTAL PROTECTION DIVISION
By Curtis E. Bardell Jr.

EPA PROJECT NO. C130409

CITY OF BRUNSWICK, GEORGIA
SEWERAGE SYSTEM IMPROVEMENTS

MISCELLANEOUS DETAILS

SCALE	WIEDEMAN AND SINGLETON ENGINEERS	SHEET
AS SHOWN	ATLANTA GEORGIA	17
DATE JAN. 1984		OF 39

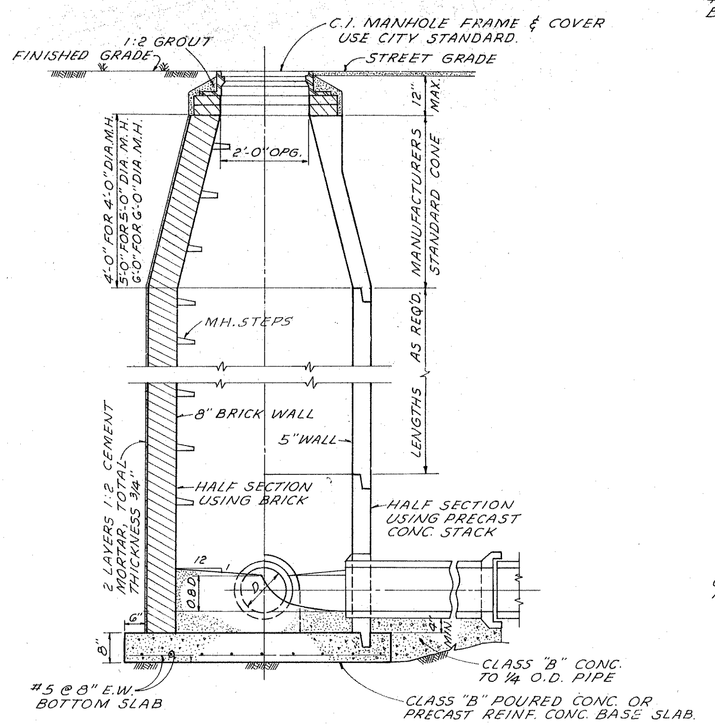

HALF SECTION USING BRICK | SECTION | HALF SECTION USING PRECAST CONC. STACK

4', 5' OR 6' DIA. MANHOLE

N.T.S.

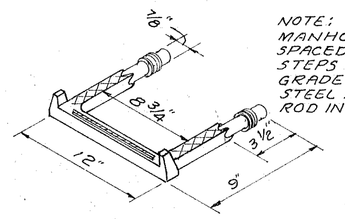

NOTE:
MANHOLE STEPS TO BE SPACED 15" C.C. STAGGERED. STEPS SHALL HAVE GRADE 60 3/8" DEFORMED STEEL REINFORCING ROD IN CENTER.

POLYPROPYLENE PLASTIC MANHOLE STEP DETAIL

FOR PRECAST CONC. M.H. & STRUCTURES

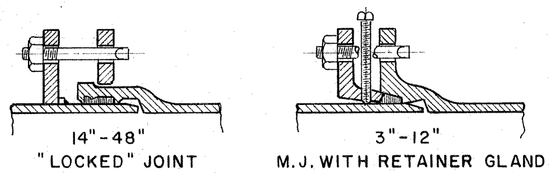

RESTRAINED JOINT PIPE DETAILS

N.T.S.

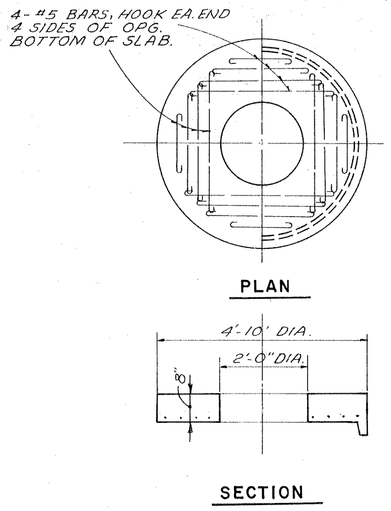

HALF SECTION USING BRICK | SECTION | HALF SECTION USING PRECAST CONC. STACK

TYPICAL 4'-0" DIA. SHALLOW MANHOLE

1/2" = 1'-0"

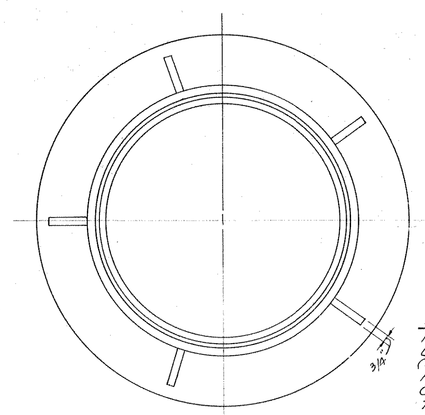

C.I. MANHOLE FRAME DETAIL

1 1/2" = 1'-0"

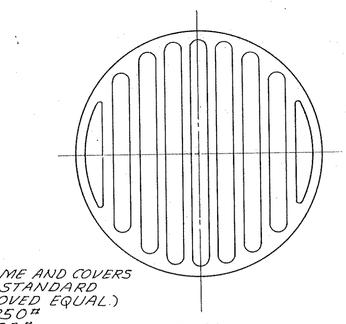

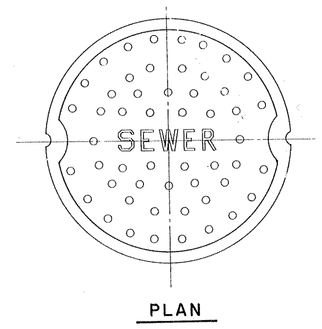

C.I. MANHOLE COVER DETAIL

1 1/2" = 1'-0"

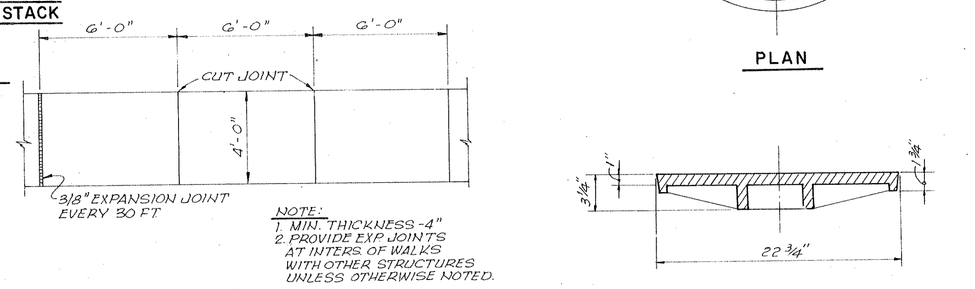

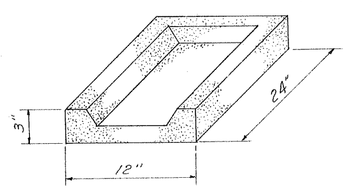

SPLASH BLOCK DETAIL

N.T.S

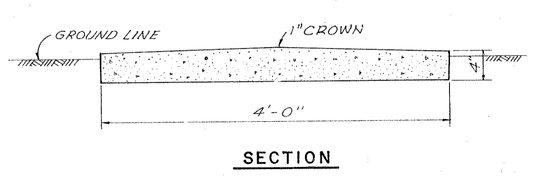

SIDEWALK DETAIL

N.T.S

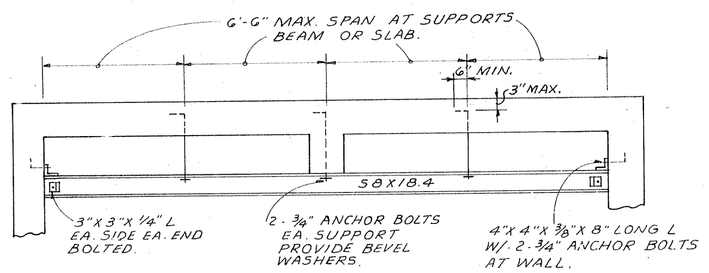

TYPICAL TROLLEY BEAM

N.T.S.

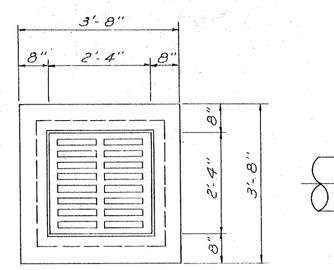

DROP INLET DETAIL

1/2" = 1'-0"

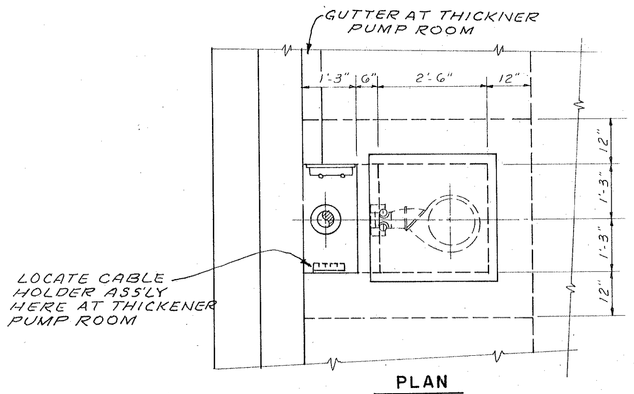

SUMP PUMP DETAIL

N.T.S.

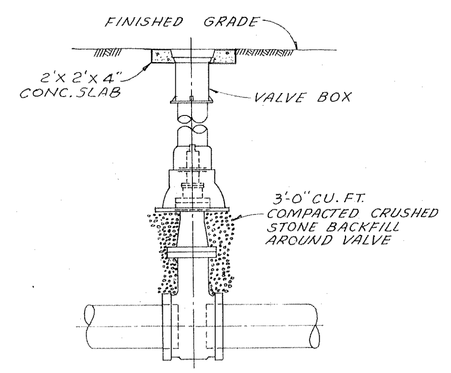

TYPICAL VALVE BOX DETAIL

N.T.S.

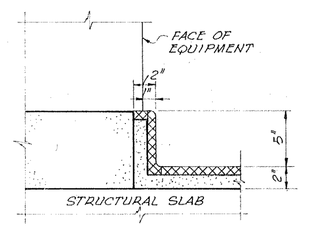

SAMPLER, METER PANEL & M.C.C.

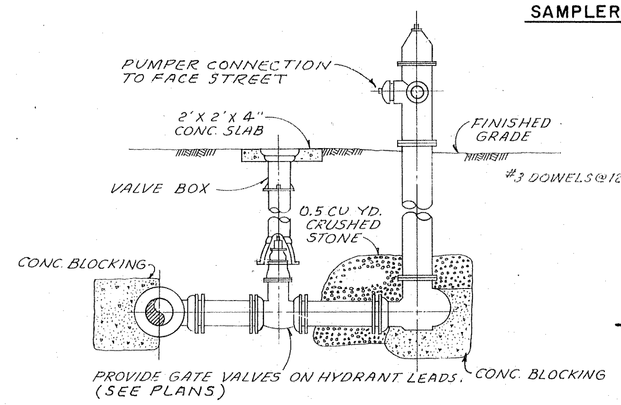

TYPICAL DETAIL OF HYDRANT INSTALLATIONS

N.T.S.

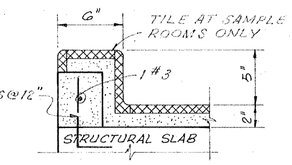

@ STAIRWELL

CURB DETAILS

1 1/2" = 1'-0"

APPROVED
STATE OF GEORGIA
MAR 15 1984
WATER QUALITY CONTROL SECTION
ENVIRONMENTAL PROTECTION DIVISION
By Curtis E. Bardell Jr.

JACK C. DOZIER P.E.

GEORGIA REGISTERED No. 5021 PROFESSIONAL ENGINEER JOHN H. WIEDEMAN

EPA PROJECT NO. C130409

CITY OF BRUNSWICK, GEORGIA
SEWERAGE SYSTEM IMPROVEMENTS

ACADEMY CREEK PLANT

MISCELLANEOUS DETAILS

SCALE		SHEET
AS SHOWN	WIEDEMAN AND SINGLETON ENGINEERS	18
DATE		OF
JAN. 1984	ATLANTA GEORGIA	39

81

AF 10479A-D

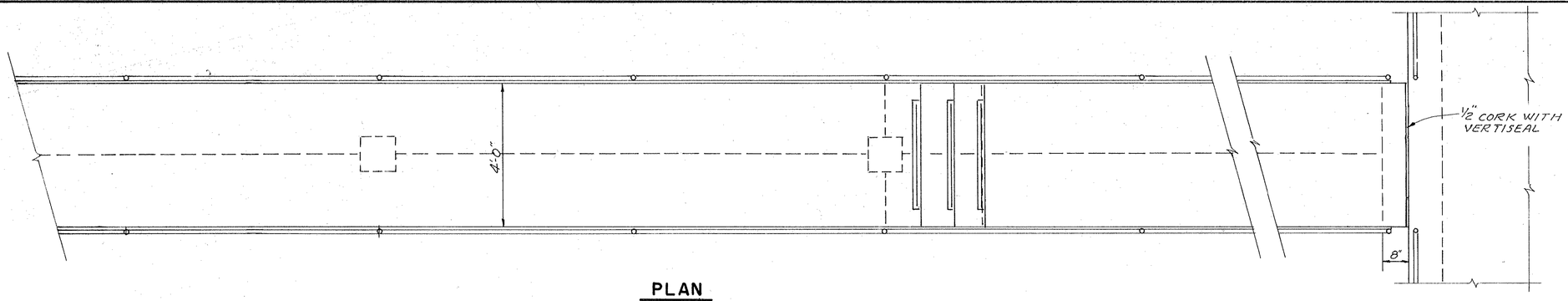

PLAN

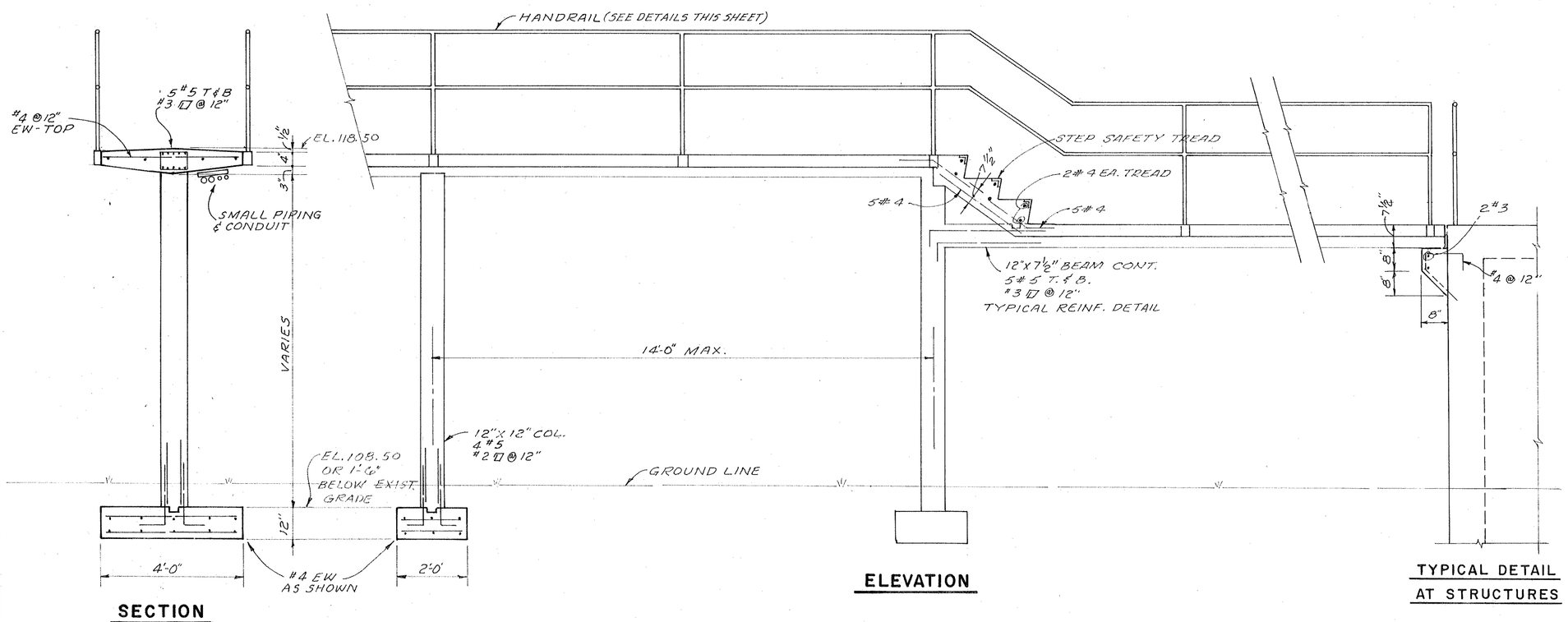

SECTION

ELEVATION

TYPICAL DETAIL AT STRUCTURES

OVERHEAD WALKWAY

1/2"=1'-0"

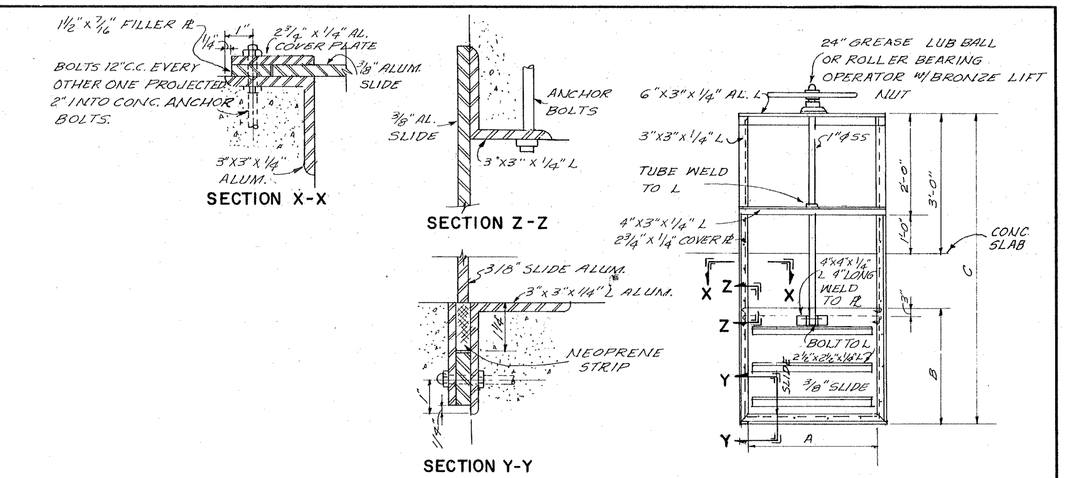

ALUMINUM FABRICATED GATE TYPE I

(SEE SCHEDULE "A" & "B")

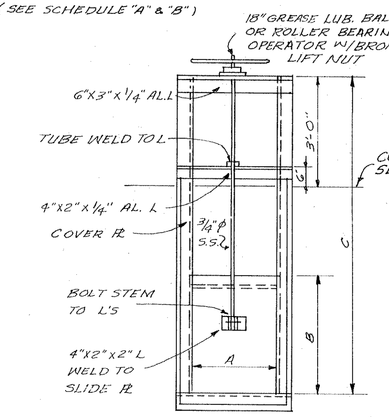

TYPE 2

(SEE SCHEDULE "A" & "B")

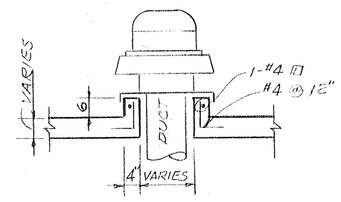

EXHAUST FAN DETAIL

N.T.S.

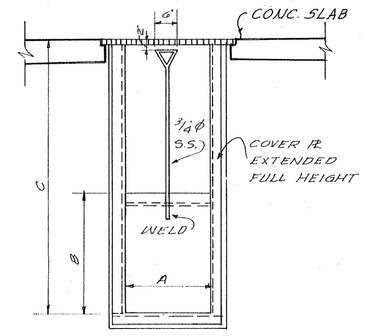

TYPE 3

(SEE SCHEDULE "A" & "B")

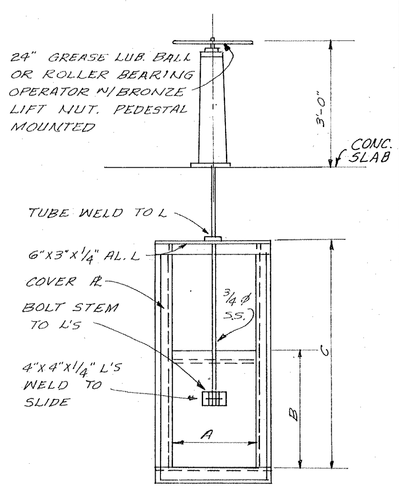

TYPE 4

SEE DETAILS @ TYPE ONE GATE - SECTION X-X, Y-Y, AND Z-Z. (SEE SCHEDULE "B" FOR ANGLE SIZES)

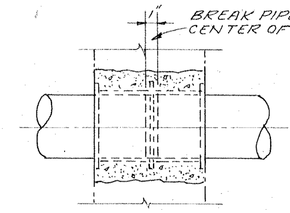

WALL SLEEVE

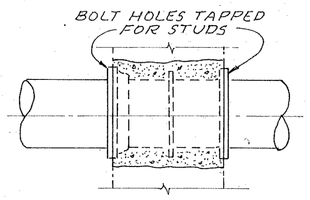

WALL PIPE

TYPICAL INSTALLATION OF WALL PIPE OR WALL SLEEVES AT EXISTING WALL

N.T.S.

NOTE: WHERE WALL PIPES OR WALL SLEEVES ARE PLACED IN EXIST. WALLS, CUT OPENINGS NEATLY AND ONLY LARGE ENOUGH TO ACCOMMODATE THE FITTING, CUT ANY REINF. ENCOUNTERED ONCE AND BEND AROUND FITTING. FILL SPACE WITH NON-SHRINK GROUT.

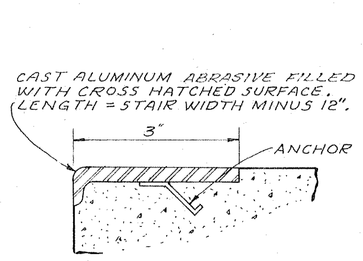

STEP SAFETY TREAD

N.T.S.

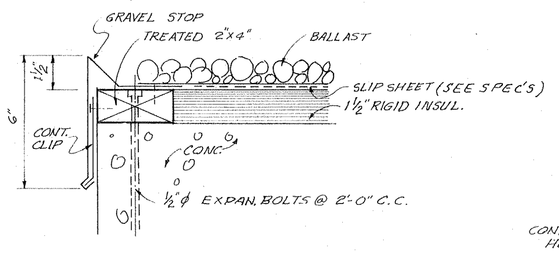

GRAVEL STOP DETAIL

N.T.S.

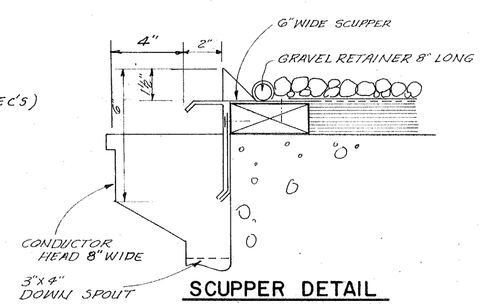

SCUPPER DETAIL

N.T.S.

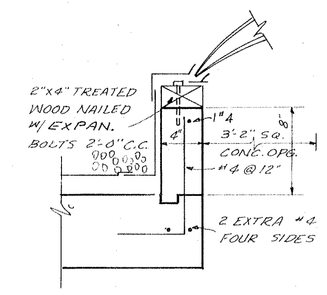

SKYLIGHT DETAIL

N.T.S.

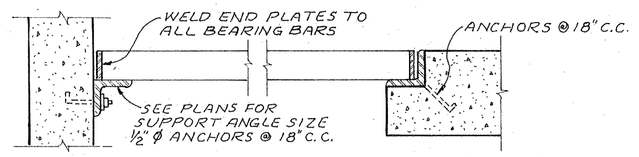

ALUM. SUBWAY GRATING. BEARING BARS 1½" FOR SPANS LESS THAN 5'-0" AND 1¾" FOR SPANS 5'-0" TO 7'-0" MAX. BAND ALL CUTOUTS. (SEE SPECS.)

ANGLE SUPPORT

USE L 1¾" x 1⅜" x ¼" & L 2" x 2" x ¼" ALUM. FRAME FOR BEARING BARS 1½" x 3/16 & 1¾" x 3/16 RESPECTIVELY.

CONCRETE SUPPORT

GRATING DETAIL

N.T.S.

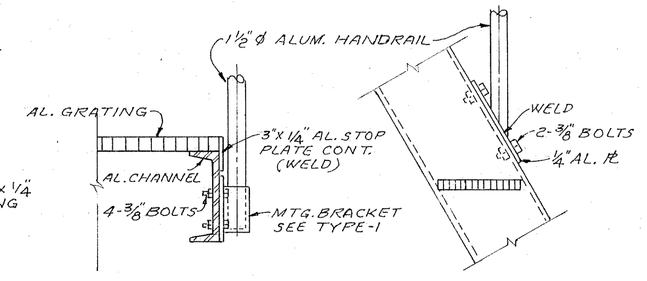

WALKWAY

STRINGER AT STAIRS

MOUTING AT BRIDGE

MARK	LOCATION	DWG. NO.	TYPE No.	No. REQ'D	DIMENSIONS A	B	C	NOTES
FG-1	RECYCLE PUMP STATION	12	3	6	12"	3'-3"	9'-4½"	*

ALUMINUM FABRICATED GATE SCHEDULE "A"

* PROVIDE ONLY TWO GATE PLATES - ONE @ EACH WET WELL.

APPROVED
STATE OF GEORGIA
MAR 15 1984
WATER QUALITY CONTROL SECTION
ENVIRONMENTAL PROTECTION DIVISION
By Charles E. Cantrell Jr.
JACK C. DOZIER P.E.

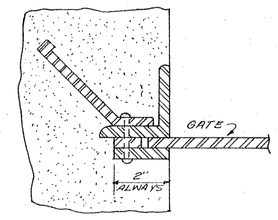

NOTE: WELD JAMB ANGLES TO SILL CLEAN FLUX & GRIND SMOOTH

JAMB SECTION

EPA PROJECT NO. C130409

CHANNEL WIDTH	16" OR LESS	18" TO 24"	30" TO 36"
6061 - T6 ANGLES	2"x 1½" x ¼"	2"x2"x ¼"	SEE
6061 - T6 RIVETS "POP" ALUMINATE	⅜" Ø @ 9"	⅜" Ø @ 6"	DETAIL
6061 - T6 FILLER PLATE	7/16" x 1"	7/16" x 1"	TYPE 1
6061 - T6 COVER PLATE	⅛" x 1½"	¼" x 1½"	
6061 - T6 GATE	⅛"	¼"	

ALUMINUM FABRICATED GATE DETAILS SCHEDULE "B"

MARK	LOCATION	DWG. No.	GATE SIZE	HEIGHT UNITARY	LIFT	FRAME TYPE & MTG. SURFACE
G-1	SPLITTER BOX C	6	24"Ø	16'-10	PEDESTAL BASE MOUNTED	2"L & ⅜Ø BOLTS WALL SIDE

SLUICE GATE SCHEDULE

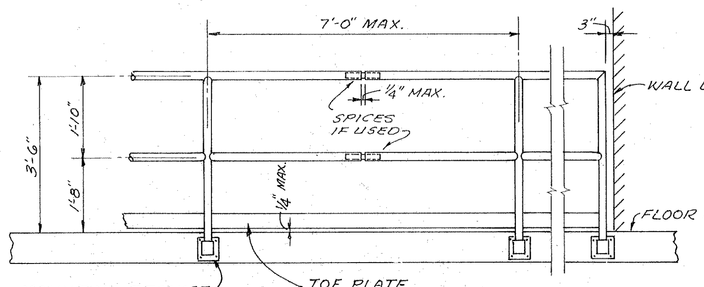

1½" Ø ALUMINUM PIPE HANDRAIL DETAIL (MILL FINISH)

N.T.S.

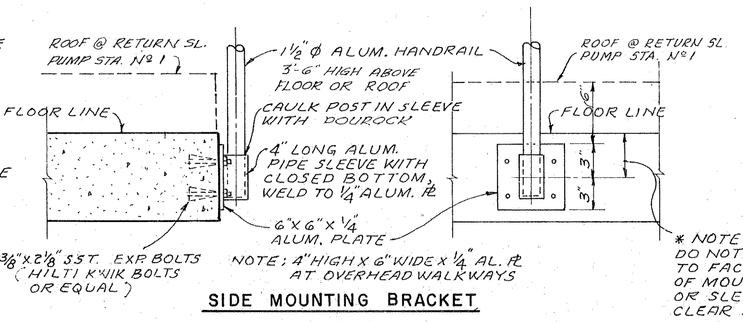

SIDE MOUNTING BRACKET (TYPE-1)

HANDRAIL MOUNTING DETAILS

N.T.S.

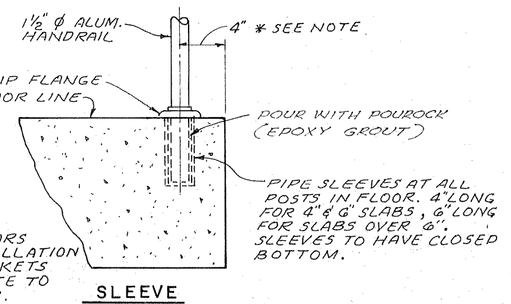

SLEEVE (TYPE-2)

GEORGIA REGISTERED No. 5021 PROFESSIONAL ENGINEER JOHN H. WIEDEMAN

CITY OF BRUNSWICK, GEORGIA
SEWERAGE SYSTEM IMPROVEMENTS

ACADEMY CREEK PLANT
MISCELLANEOUS DETAILS

SCALE AS SHOWN	WIEDEMAN AND SINGLETON ENGINEERS	SHEET 19
DATE JAN. 1984	ATLANTA GEORGIA	OF 39

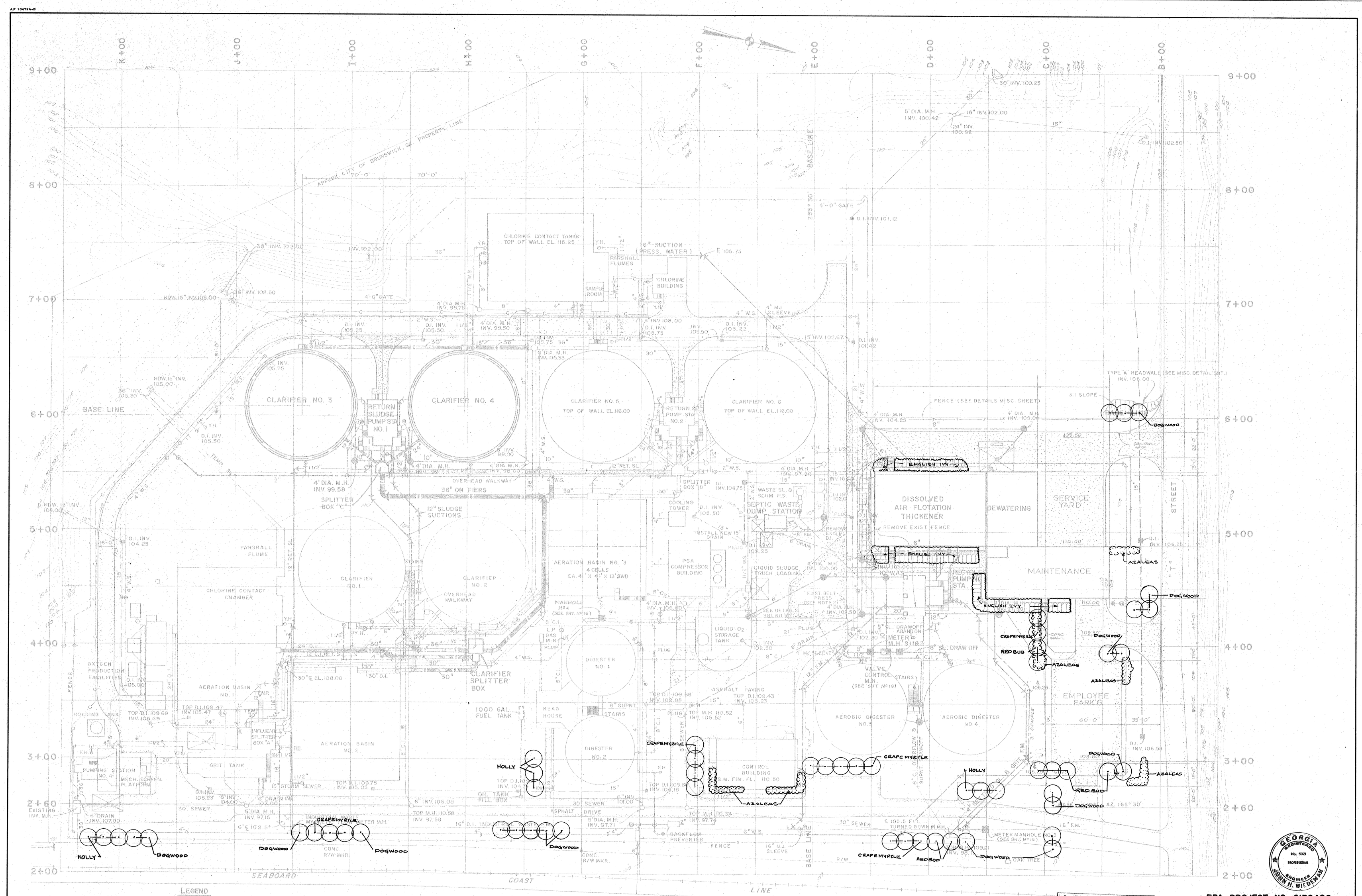

LEGEND

	PROPOSED	EXISTING
STRUCTURES		
ROADS		
DROP INLETS	FIRE HYD.	YARD HYD.
WATER LINES	VALVE	VALVE
CHLORINE LINES (2" P.V.C. SCHEDULE 80)	C	C
CHLORINE APPLICATION POINT (A)		
OVERHEAD WALKWAY		
CLAY OR CONC. PIPE		
CL. OR D.I. PIPE		

(1) NOTE: TOP OF ALL DROP INLETS TO BE 6" BELOW FIN. GR. EXCEPT AS NOTED.

(2) NOTE: EXIST. BELT PRESS TO REMAIN IN OPERATION UNTIL NEW DEWATERING BLDG. IS IN SERVICE THEN REMOVE BELT PRESS, PIPING, AND CONC. SLAB.

(3) NOTE: ALL FORCE MAINS & WATER LINES 4" & LARGER TO HAVE RESTRAINED JOINTS SEE MISC. SHT.

(4) NOTE: GROUND TO SLOPE AWAY FROM STRUCTURES TOWARD NATURAL DRAINAGE.

(5) NOTE: FOR SOME DETAILS NOT SHOWN SEE DETAIL DRAWING AT EACH STRUCTURE.

(6) NOTE: SEE MISC. DETAILS SHT. FOR STD. M.H. AND D.I.

APPROVED
STATE OF GEORGIA
MAR 15 1984
WATER QUALITY CONTROL SECTION
ENVIRONMENTAL PROTECTION DIVISION
By Curtis E. Bassell Jr.

JACK C. DOZIER P.E.

DATUM EQUALS USC&GS MEAN SEA LEVEL PLUS 100.00 FT.

GEORGIA REGISTERED No. 5021 PROFESSIONAL ENGINEER JOHN H. WIEDEMAN

EPA PROJECT NO. C130409

CITY OF BRUNSWICK, GEORGIA
SEWERAGE SYSTEM IMPROVEMENTS

ACADEMY CREEK PLANT
LANDSCAPE PLAN

SCALE 1"=30'	WIEDEMAN AND SINGLETON ENGINEERS	SHEET 20
DATE JAN., 1984	ATLANTA GEORGIA	OF 39

AF 1047BA-B

PLANT SCHEDULE

NAME	SIZE	NO.	REMARKS
SORTUS FLORIDA (DOGWOOD)	1½"-1¾" CALIPER	23	CLUMP / MULTIPLE BRANCHING
CERCIS CANADENSIS (REDBUD)	1½"-1¾" CALIPER	18	SINGLE
LAGERSTROEMIA INDICA (CRAPE MYRTLE)	1½"-1¾" CALIPER	17	BUSH FORM - MULTI BRANCHING
(NANDINA) HEAVENLY BAMBOO	18"-24" HT. 1½"-2" SPRD	68	PLANT 3'-0" O.C. IN STAGGERED ROWS
ILEX CORNUTA BURFORDII BURFORD'S HOLLY	3'-4' HIGH	9	PLANT AS SHOWN ON PLANS
BERMUDA GRASS (SEEDED OR SOD)		SQ. YDS. MAIN	PLANT AS SHOWN ON PLANS

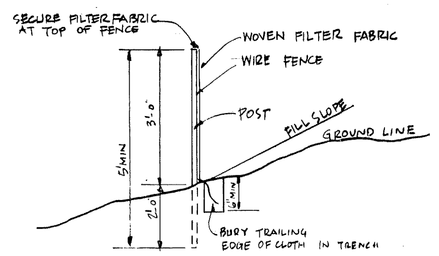

SECTION THRU FENCE

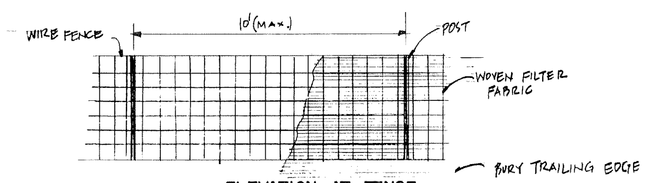

ELEVATION AT FENCE

SILT FENCE DETAILS
NTS

LOCATION OF SEDIMENTATION CONTROL STRUCTURES

WHERE LOCATION OF TEMPORARY SEDIMENTATION CONTROL STRUCTURES ARE NOT INDICATED ON THE DRAWING, THE FOLLOWING GUIDELINES SHALL BE USED:

INSTALL SEDIMENTATION STRUCTURES AT THE TOE OF ALL DISTURBED EARTH SLOPES, AROUND ALL DRAINAGE STRUCTURE INLETS, ACROSS CONSTRUCTED DRAINAGEWAYS AT APPROX. 150 FT. CENTERS AND AT THE TOPS OF SLOPES AND TERRACED SLOPES AS INDICATED ON THE DETAILS.

SILTATION FENCES OR HAY BALES ONLY SHALL BE USED ACROSS CONSTRUCTED DRAINAGEWAYS

HAY BALES ONLY SHALL BE USED AT DRAINAGE STRUCTURE INLETS.

PERIMETER BARRIERS MAY BE ANY OF OF THE TYPES DETAILED OR SPECIFIED.

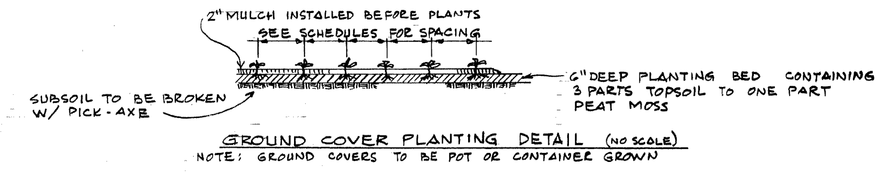

GROUND COVER PLANTING DETAIL (NO SCALE)
NOTE: GROUND COVERS TO BE POT OR CONTAINER GROWN

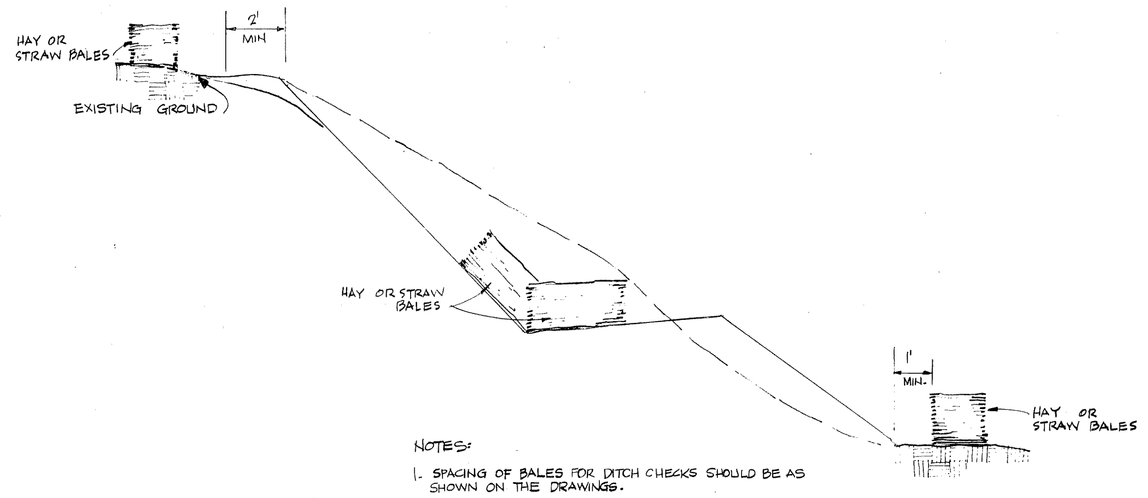

NOTES:
1. SPACING OF BALES FOR DITCH CHECKS SHOULD BE AS SHOWN ON THE DRAWINGS.
2. ANCHORS WILL BE NECESSARY ONLY ON SLOPES GREATER THAN 20%, AND SHALL CONSIST OF (2) TWO 1" x 2" x 30" WOODEN STAKES, DRIVEN THROUGH THE BALES.

HAY OR STRAW BALES SECTIONS

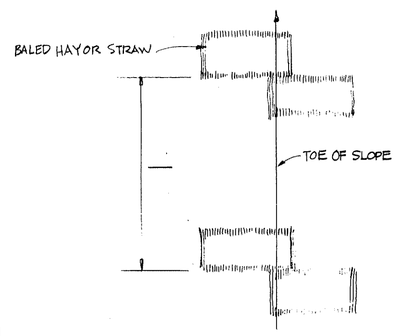

PLAN AT DITCH CHECKS

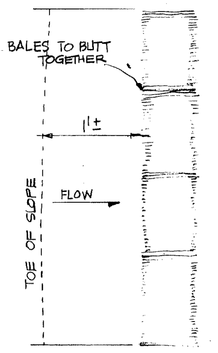

PLAN AT TOE OF FILL

HAY OR STRAW BALE DETAILS
NTS

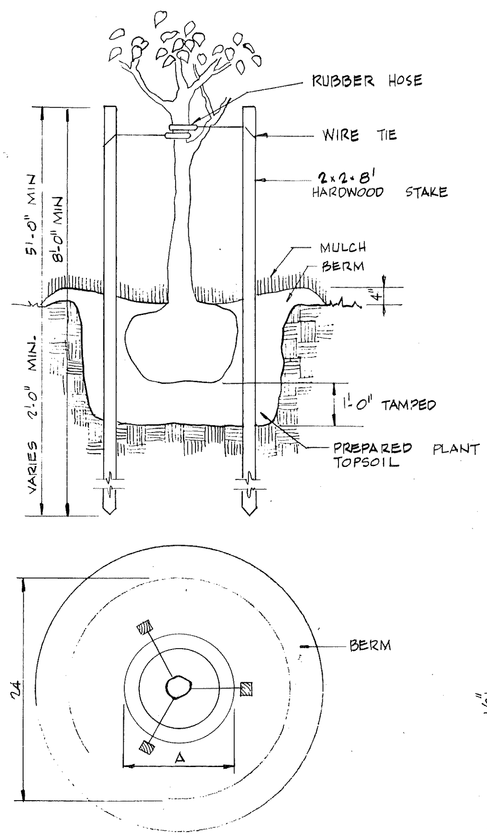

TREES

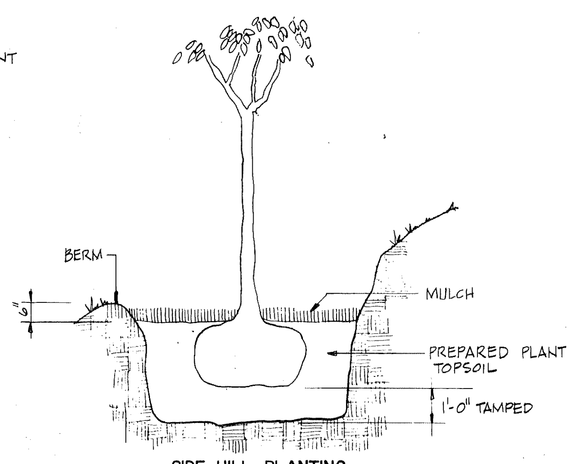

SIDE HILL PLANTING

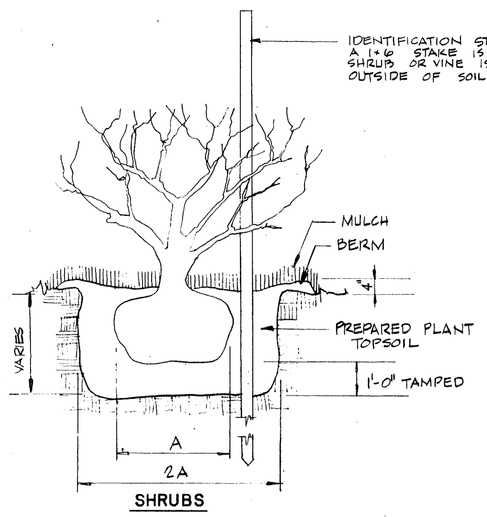

SHRUBS

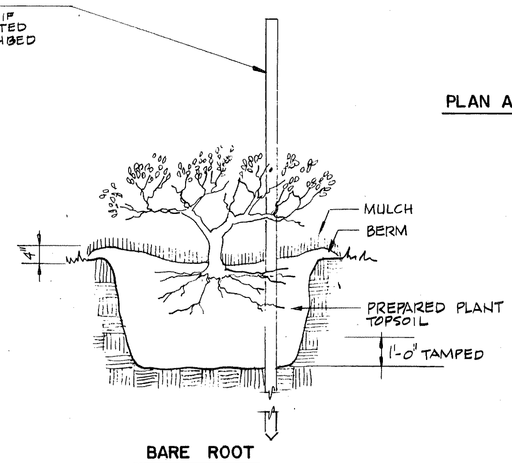

BARE ROOT

PLANTING DETAILS
NTS

APPROVED
STATE OF GEORGIA
MAR 15 1984
WATER QUALITY CONTROL SECTION
ENVIRONMENTAL PROTECTION DIVISION
By Charles E. Caldwell Jr.
JACK C. DOZIER P.E.

GEORGIA REGISTERED No. 5021 PROFESSIONAL ENGINEER JOHN H. WIEDEMAN

EPA PROJECT NO. C130409

CITY OF BRUNSWICK, GEORGIA
SEWERAGE SYSTEM IMPROVEMENTS

ACADEMY CREEK PLANT

SEDIMENTATION CONTROL & LANDSCAPE DETAILS

SCALE	WIEDEMAN AND SINGLETON ENGINEERS	SHEET
AS SHOWN		21
DATE		OF 39
JAN., 1984	ATLANTA GEORGIA	

EPA PROJECT NO. C130409

CITY OF BRUNSWICK, GEORGIA
SEWERAGE SYSTEM IMPROVEMENTS

ACADEMY CREEK PLANT

DEWATERING-MAINTENANCE BUILDING
LOWER LEVEL FLOOR PLAN

SCALE	WIEDEMAN AND SINGLETON	SHEET
1/8"=1'-0"	ENGINEERS	22
DATE	ATLANTA GEORGIA	OF 39
JAN.,1984		

APPROVED
STATE OF GEORGIA
MAR 15 1984
WATER QUALITY CONTROL SECTION
ENVIRONMENTAL PROTECTION DIVISION
By Carlos E. Dozier P.E.

JACK C. DOZIER P.E.

GEORGIA REGISTERED No. 5021 PROFESSIONAL ENGINEER JOHN H. WIEDEMAN

NOTES:
1) SEE "S" SERIES DWGS FOR COLUMNS, BEAMS & FOOTING/FOUNDATION INFO.
2) SEE "M" SERIES DWGS FOR HVAC & PLUMBING INFO.
3) SEE "E" SERIES DWGS FOR ELECTRICAL INFO.
4) SEE SHEETS #33-38 FOR SECTIONS INDICATED

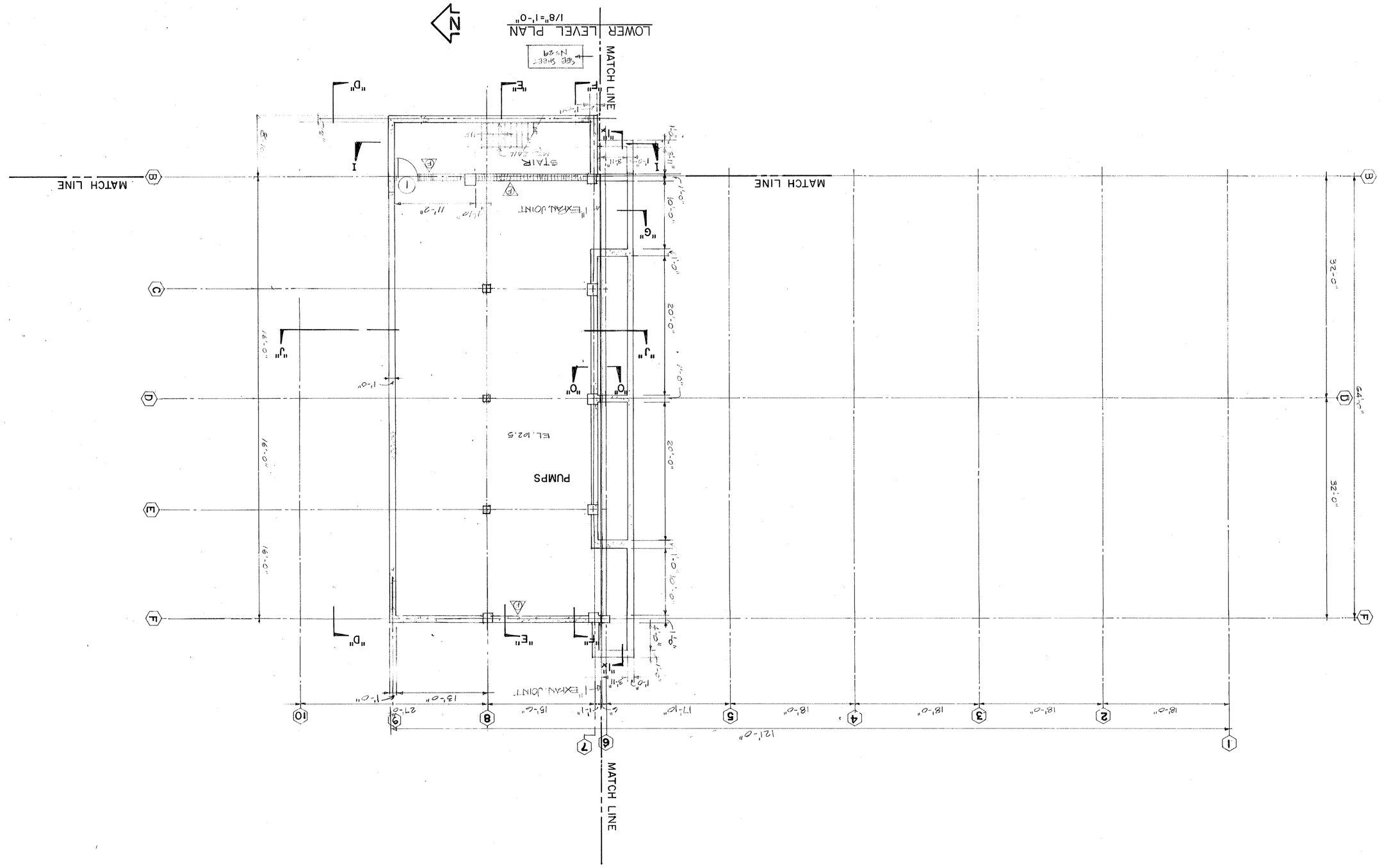

33

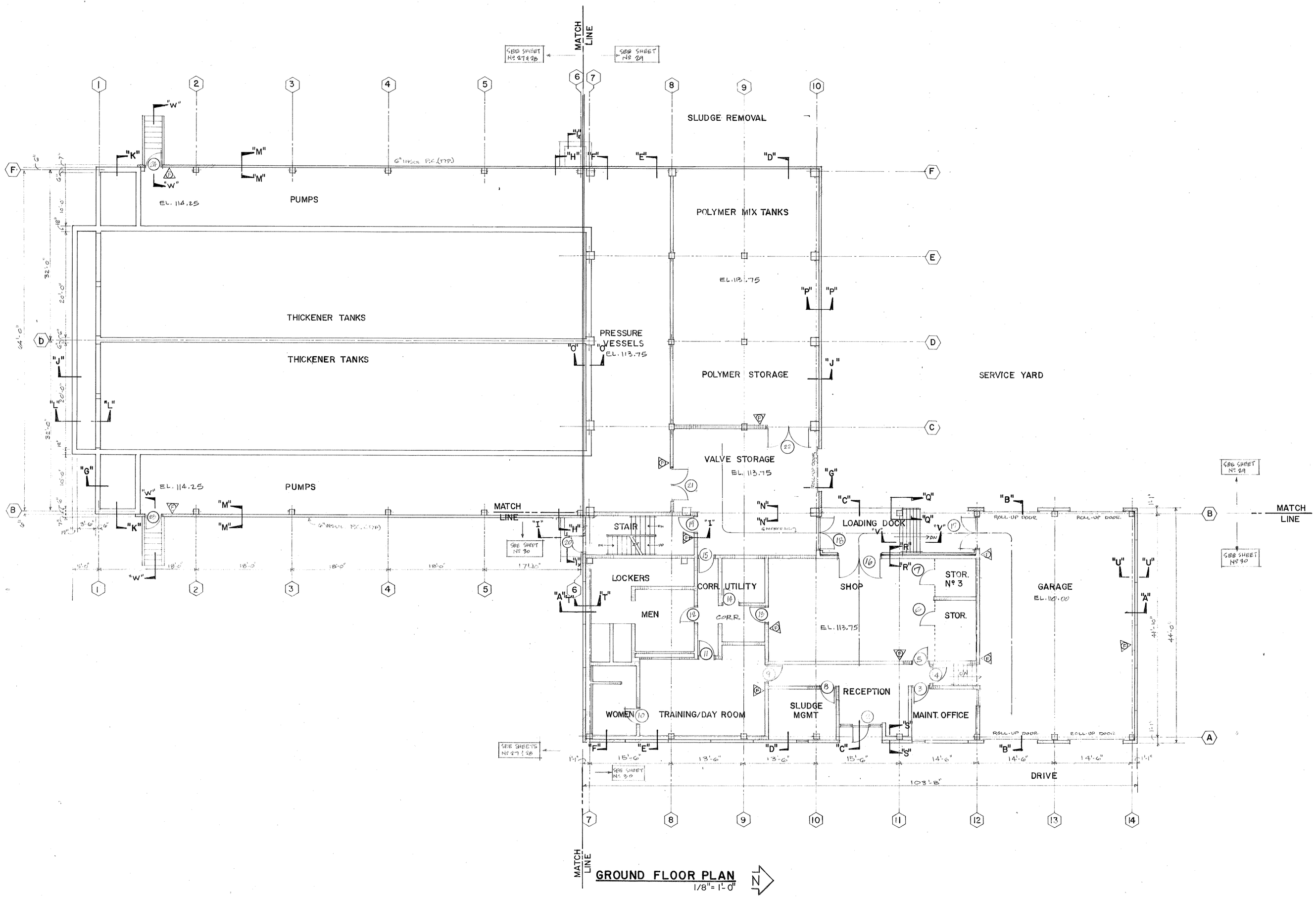

GROUND FLOOR PLAN
1/8" = 1'-0"

NOTES:
1) SEE "S" SERIES DWGS FOR COLUMNS, BEAMS & FOOTING / FOUNDATION INFO.
2) SEE "M" SERIES DWGS FOR HVAC & PLUMBING INFO.
3) SEE "E" SERIES DWGS FOR ELECTRICAL INFO.
4) SEE SHEETS #33-38 FOR SECTIONS INDICATED

GEORGIA REGISTERED No. 6071 PROFESSIONAL ENGINEER JOHN H. WIEDEMAN

APPROVED
STATE OF GEORGIA
MAR 15 1984
WATER QUALITY CONTROL SECTION
ENVIRONMENTAL PROTECTION DIVISION
By Curtis E. Bassell Jr.

JACK C. DOZIER P.E.

EPA PROJECT NO. C130409

CITY OF BRUNSWICK, GEORGIA
SEWERAGE SYSTEM IMPROVEMENTS

ACADEMY CREEK PLANT
DEWATERING-MAINTENANCE BUILDING
GROUND FLOOR PLAN

SCALE 1/8" = 1'-0"	WIEDEMAN AND SINGLETON ENGINEERS	SHEET 23
DATE JAN., 1984	ATLANTA GEORGIA	OF 39

34

AF 10479A-D

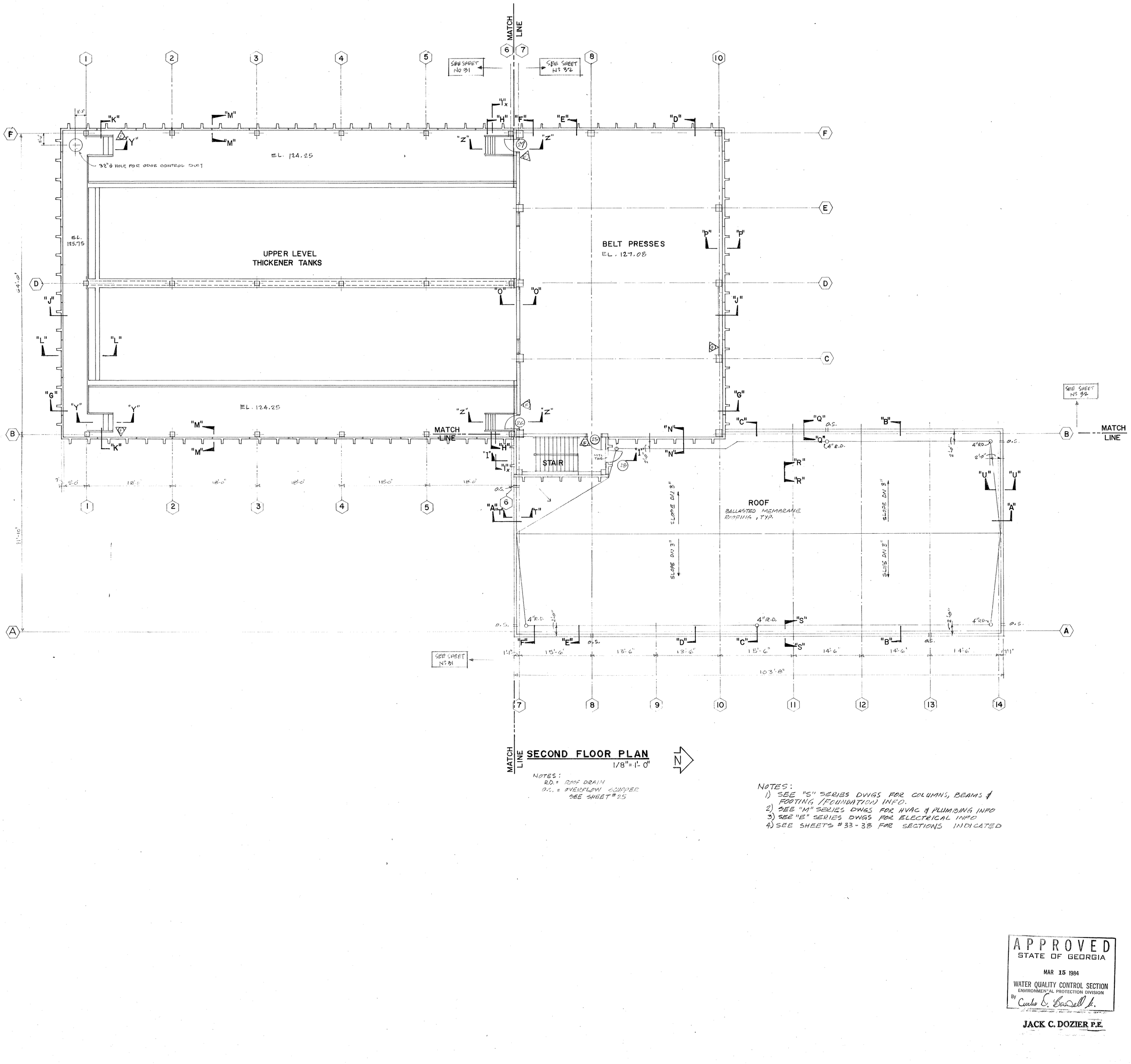

SECOND FLOOR PLAN

1/8"= 1'- 0"

NOTES:
R.D. = ROOF DRAIN
O.S. = OVERFLOW SCUPPER
SEE SHEET # 25

NOTES:
1) SEE "S" SERIES DWGS FOR COLUMNS, BEAMS & FOOTING / FOUNDATION INFO.
2) SEE "M" SERIES DWGS FOR HVAC & PLUMBING INFO
3) SEE "E" SERIES DWGS FOR ELECTRICAL INFO
4) SEE SHEETS # 33 - 38 FOR SECTIONS INDICATED

APPROVED
STATE OF GEORGIA
MAR 15 1984
WATER QUALITY CONTROL SECTION
ENVIRONMENTAL PROTECTION DIVISION
By Curtis E. Bardell Jr.

JACK C. DOZIER P.E.

GEORGIA REGISTERED No. 5021 PROFESSIONAL ENGINEER JOHN H. WIEDEMAN

EPA PROJECT NO. C130409

CITY OF BRUNSWICK, GEORGIA
SEWERAGE SYSTEM IMPROVEMENTS.

ACADEMY CREEK PLANT

DEWATERING-MAINTENANCE BUILDING
SECOND FLOOR PLAN

SCALE	WIEDEMAN AND SINGLETON ENGINEERS	SHEET
1/8"= 1'-0"		24
DATE	ATLANTA GEORGIA	OF 39
JAN., 1984		

35

AF 10479A-B

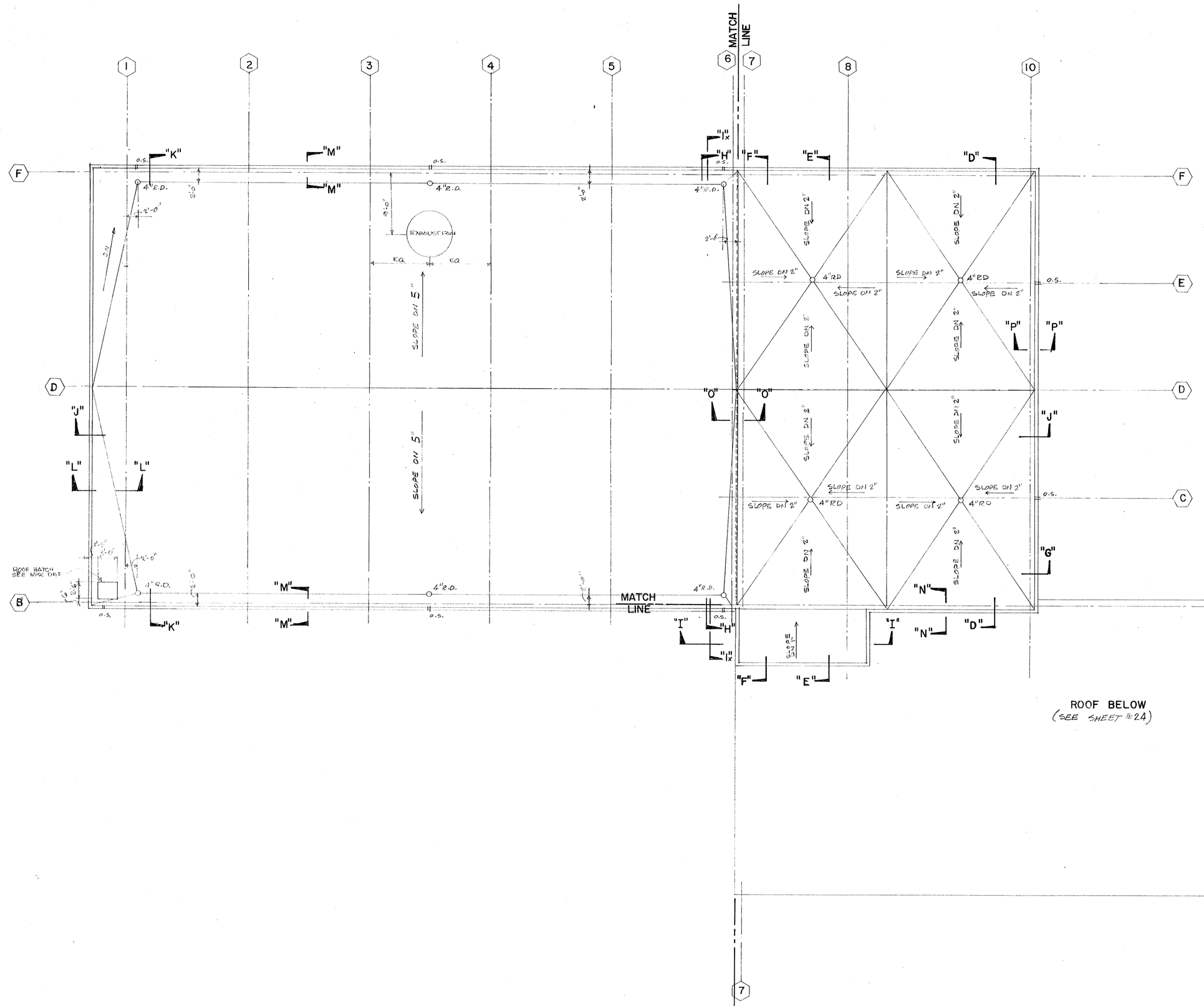

ROOF PLAN - THICKENER/DEWATERING
1/8"=1'-0"

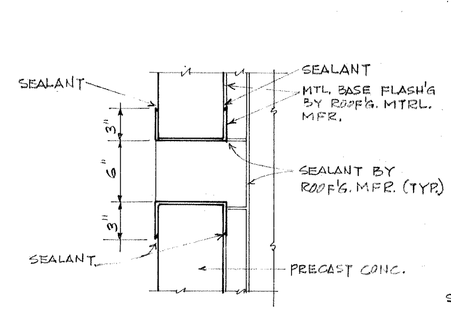

PLAN AT OVERFLOW SCUPPER
1/2"=1'-0"

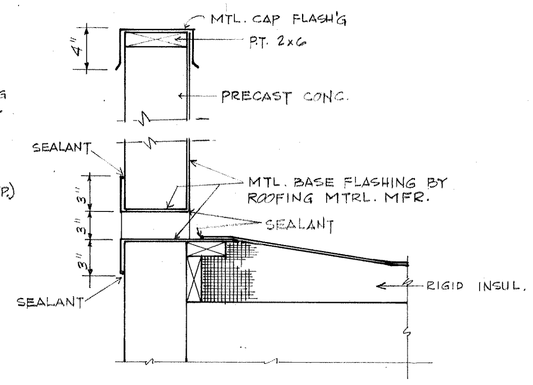

SECTION / OVERFLOW SCUPPER
1/2"=1'-0"

APPROVED
STATE OF GEORGIA
MAR 15 1984
WATER QUALITY CONTROL SECTION
ENVIRONMENTAL PROTECTION DIVISION
By Curtis C. Caldwell Jr.

JACK C. DOZIER P.E.

GEORGIA REGISTERED No. 5021 PROFESSIONAL ENGINEER JOHN H. WIEDEMAN

EPA PROJECT NO. C130409

CITY OF BRUNSWICK, GEORGIA
SEWERAGE SYSTEM IMPROVEMENTS

ACADEMY CREEK PLANT
DEWATERING & MAINTENANCE BUILDING

SCALE AS SHOWN	WIEDEMAN AND SINGLETON ENGINEERS	SHEET 25
DATE JAN., 1984	ATLANTA GEORGIA	OF 39

36

AF 10479A-B

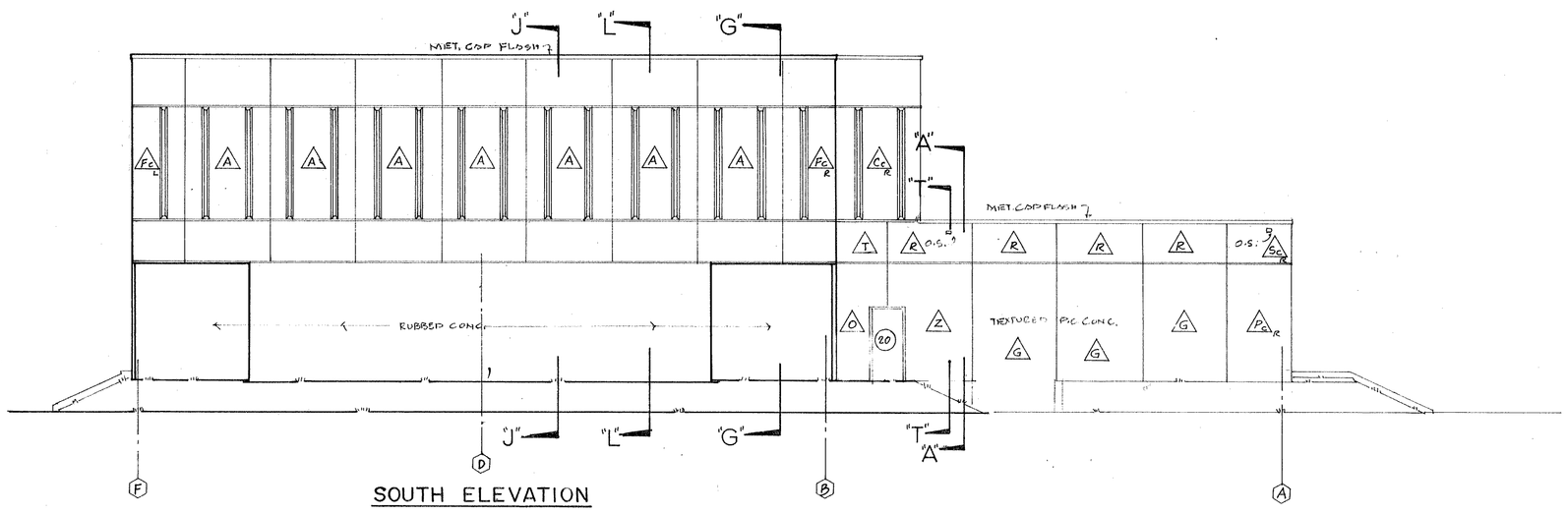

SOUTH ELEVATION

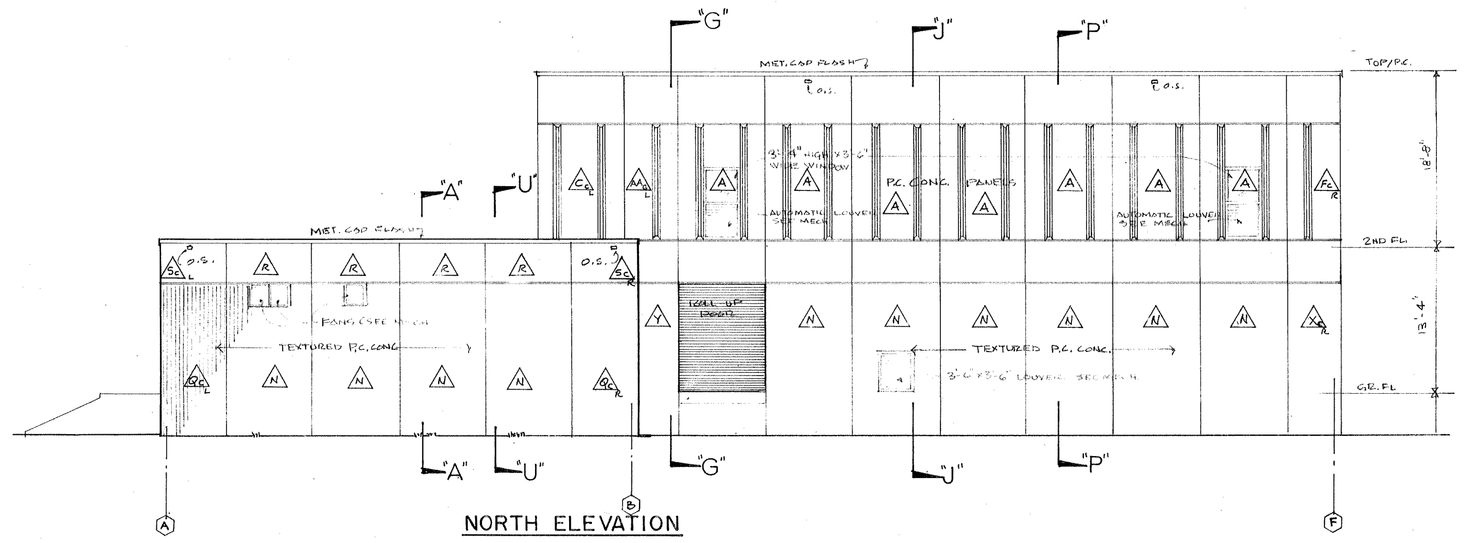

NORTH ELEVATION

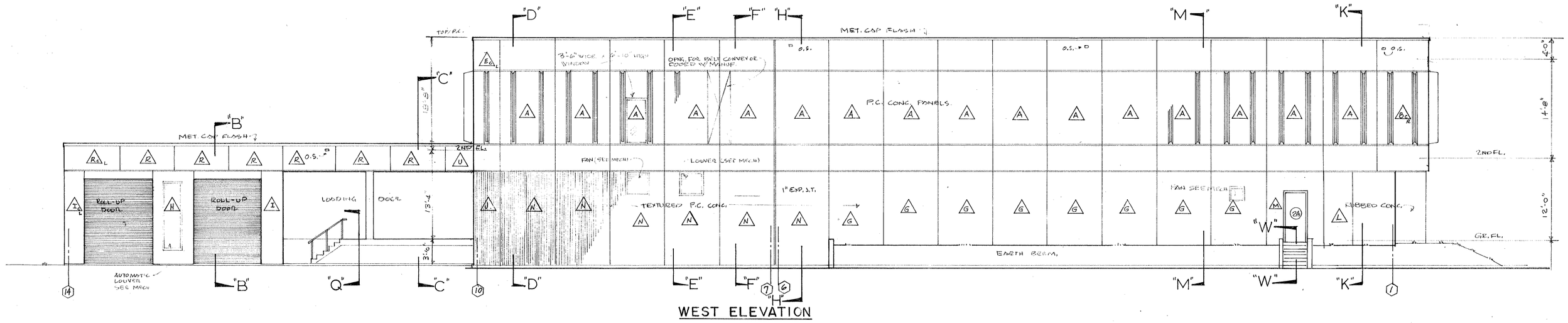

WEST ELEVATION

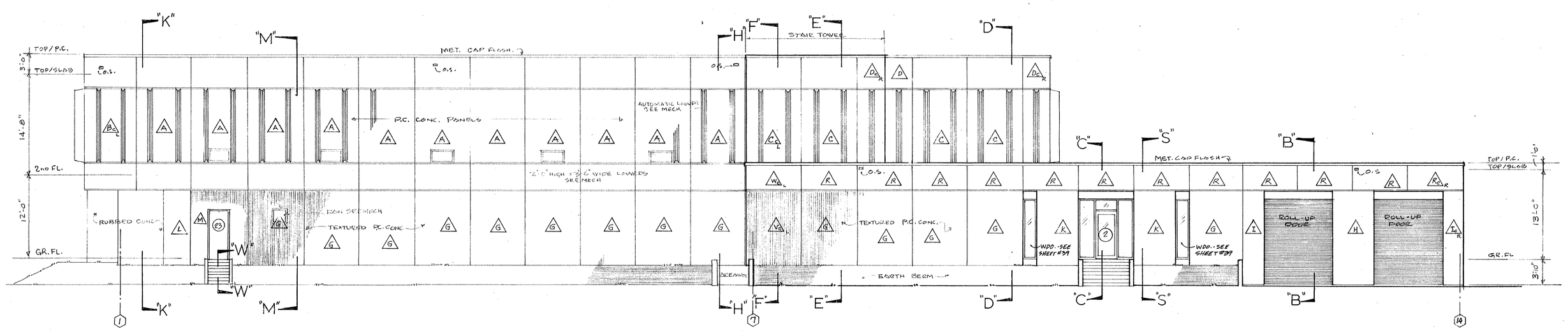

EAST ELEVATION

NOTE: SEE SHEET No. 38 FOR PRECAST PANEL DETAILS (A)

SEE SHEETS #33 - #38 FOR SECTIONS INDICATED

APPROVED
STATE OF GEORGIA
MAR 15 1984
WATER QUALITY CONTROL SECTION
ENVIRONMENTAL PROTECTION DIVISION
By Curtis E. Bardell Jr.

JACK C. DOZIER P.E.

GEORGIA REGISTERED No. 8021 PROFESSIONAL ENGINEER JOHN M. WIEDEMAN

EPA PROJECT NO. C130409

CITY OF BRUNSWICK, GEORGIA
SEWERAGE SYSTEM IMPROVEMENTS

ACADEMY CREEK PLANT

DEWATERING-MAINTENANCE BUILDING ELEVATIONS

SCALE	WIEDEMAN AND SINGLETON ENGINEERS	SHEET
1/8"=1'-0"		26
DATE	ATLANTA GEORGIA	OF 39
JAN. 1984		

37

EPA PROJECT NO. C130409

CITY OF BRUNSWICK, GEORGIA
SEWERAGE SYSTEM IMPROVEMENTS

ACADEMY CREEK PLANT

THICKENER
PLAN AT ELEV. 113.75

SCALE	WIEDEMAN AND SINGLETON	SHEET
1/4" = 1'-0"	ENGINEERS	27
DATE	ATLANTA GEORGIA	OF 39
JAN. 1984		

KEY PLAN

THICKENER
OEWATERING

SEE SHEETS No. 29430

MATCH LINE FOLLOWS EXP JOINT

MATCH LINE

SEE SHEET No. 28

SEE SHEET No. 29

JACK C. DOZIER P.E.

GEORGIA REGISTERED PROFESSIONAL No. 5231 — JOHN H. WIEDEMAN — ENGINEER

APPROVED
STATE OF GEORGIA
MAR 15 1984
WATER QUALITY CONTROL SECTION
ENVIRONMENTAL PROTECTION DIVISION
By Charles E. Bowden Jr.

TYPICAL PRESSURE TANK-PIPING SCHEMATIC
N.T.S.

EL. 102.75
COMPRESSOR
CK.V.
AIR
PRESSURE TANK
LEVEL SWITCH
CONTROL VALVE
TO MANIFOLD
PRESSURE WATER
FLOW METER
SEE SHEET No. 29
ALSO SEE SHEET No. 28
NOTE: ALL AIR PIPING IS 3/4"
PRESSURE GAUGE
SAFETY RELIEF VALVE
PRESSURE CONTROL PANEL

PLAN AT ELEV. 113.75
1/4" = 1'-0"

N

THICKENER TANK

BOTTOM COLLECTOR SHAFT

BOTTOM SCRAPER BLADE

20'-0"

Ø SL FEED

PRESSURE TANKS

PRESSURE TANK

MANIFOLDED BY EQUIP. MFR.

TANK DRAIN

SUCTION JET VALVE GUIDE BY MANUFACTURER

COLLECTOR DRIVE

SLOPE

4" DRAIN

TRENCH DRAIN

AL. GRATING

SLUDGE PUMPS

NO. 1
NO. 2
NO. 3
NO. 4

3/4" UP TO HB

SLUDGE WELL

G" DRAIN TO MANHOLE

G" SLUDGE FEED

G" DRAIN

FAN (SEE MECH)

MACERATOR

VENT

45° BENDS

G" DRAIN

INV 103.75

INV 103.00

INV 102.00

G" SL. FEED @ 0.50

G" DRAIN

G" SLUDGE FEED @ EL. 109.00

DETAIL D-D
1/4" = 1'-0"

G" SLEEVE
CLASS 'E' CONC.
G" 90° BASE ELL
EL. 108.29
G" SLUDGE FEED @ EL. 109.00
G" DRAIN INLET @ 103.75
SECTION

PROVIDE ALL SUPPORT DETAILS FOR AIR PIPING & EQUIPMENT ON SHOP DRAWINGS.

THICKENER TANK
PROVIDE COMPRESSORS
SEE PIPING SCHEMATIC FOR AIR LINE SIZES THIS SHEET

DOWN TO COMPRESSORS

4" DRAIN FROM BASE

ALUM PLATE TANK
SEE DETAIL SHEET 34

12" W.S. DN. &UP

1" W.S.

2" W.S. DN. &UP

1"xE" REDO.

WASTE SLUDGE

ALUMINUM GRATE

ELEVATOR

MATCH LINE

TOP EL. 113.75

EXP JT.

ELEVATOR

ALUMINUM GRATE

MATCH LINE

TOP EL. 113.75

ALUMINUM GRATE

EL. 113.75

EXP. JT.

1" EXP. JT.

1" W.S.

3/4" UP TO HB

SLUDGE PUMPS

NO. 1
NO. 2

4"xG" RED. ELL.

4" FP

MACERATOR

G" DRAIN

G" P TRAP IN LINE

EL. 114.25

G" DRAIN TO MANHOLE

VENT

FAN (SEE MECH)

SLUDGE WELL

G" FEED

G" ℄ EL. 109.00

BRIDGE IN CLASS 'C' CONC.

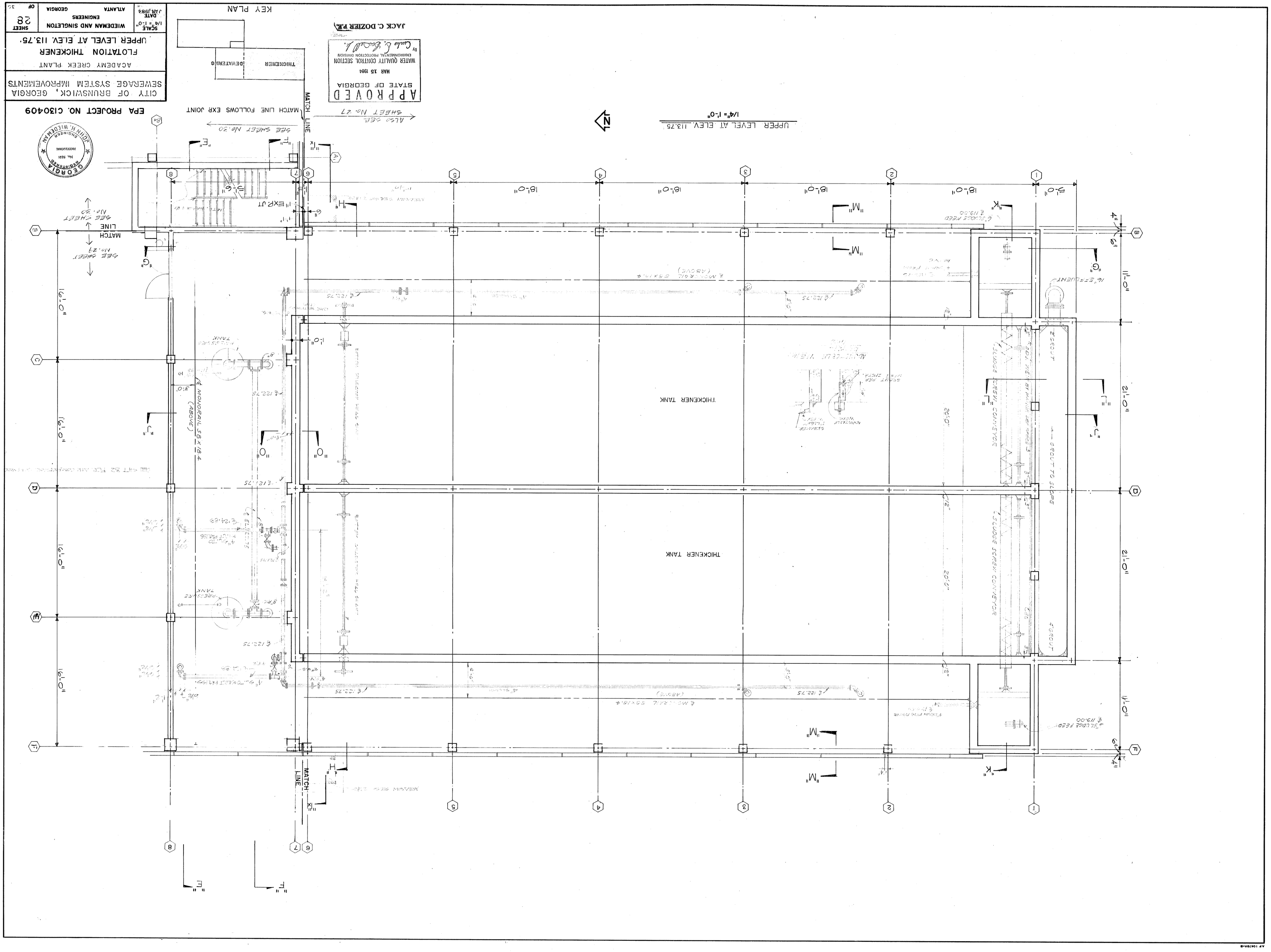

CITY OF BRUNSWICK, GEORGIA
SEWERAGE SYSTEM IMPROVEMENTS
ACADEMY CREEK PLANT
FLOTATION THICKENER
UPPER LEVEL AT ELEV. 113.75'
SCALE 1/4" = 1'-0"
DATE JAN. 1984
WIEDEMAN AND SINGLETON ENGINEERS
ATLANTA GEORGIA
SHEET 28 OF 30
EPA PROJECT NO. C130409
APPROVED
STATE OF GEORGIA
MAR 15 1984
WATER QUALITY CONTROL SECTION
ENVIRONMENTAL PROTECTION DIVISION
JACK C. DOZIER P.E.
KEY PLAN
THICKENER
DEWATERING
MATCH LINE FOLLOWS EXP JOINT
SEE SHEET No. 30
ALSO SEE SHEET No. 27
UPPER LEVEL AT ELEV. 113.75
1/4" = 1'-0"
THICKENER TANK
THICKENER TANK
SLUDGE SCREW CONVEYOR
SLUDGE SCREW CONVEYOR
16" EFFLUENT
MATCH LINE

AF 10473A-B

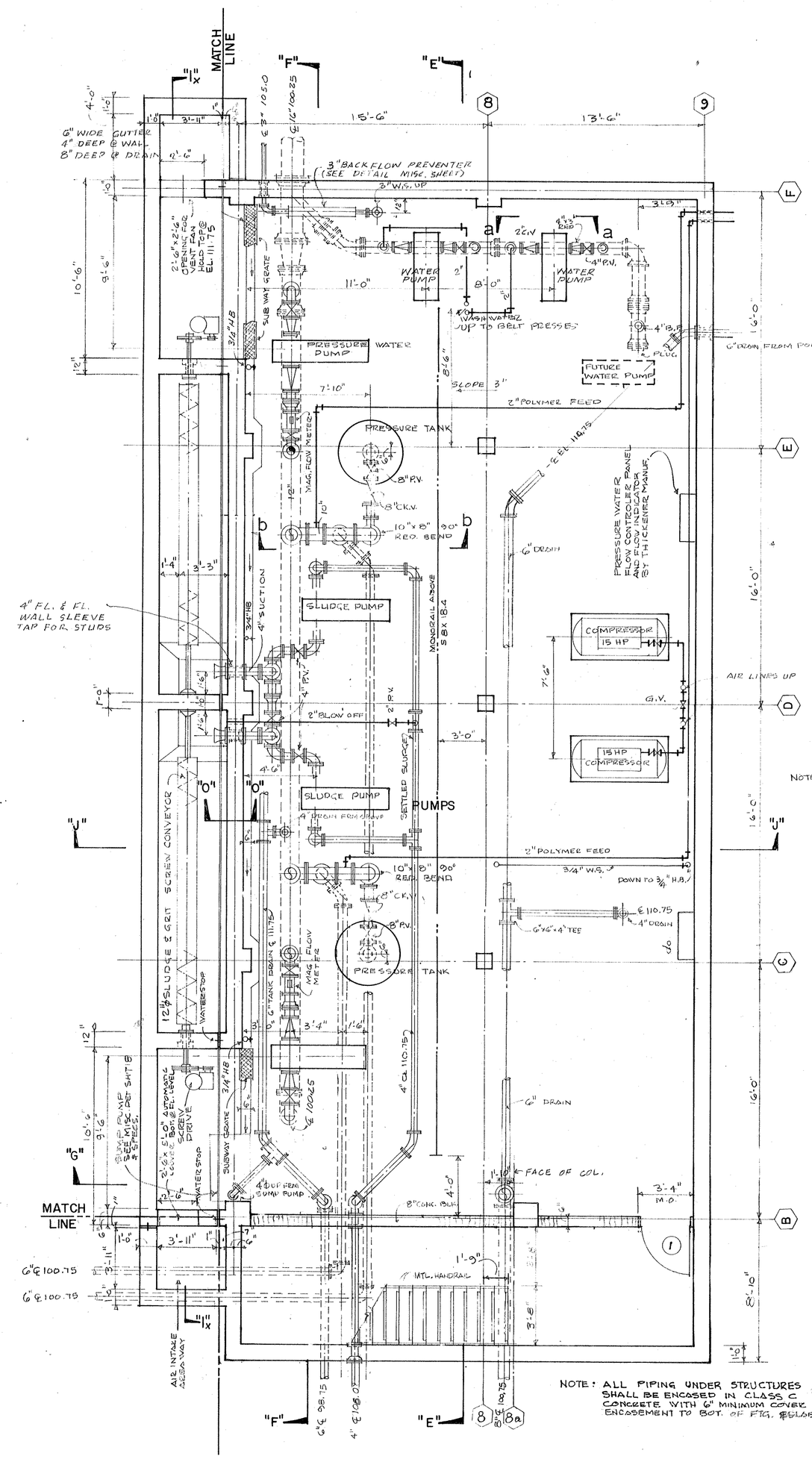

SEE SHEETS No. 27428

PARTIAL LOWER LEVEL PLAN
1/4" = 1'-0"

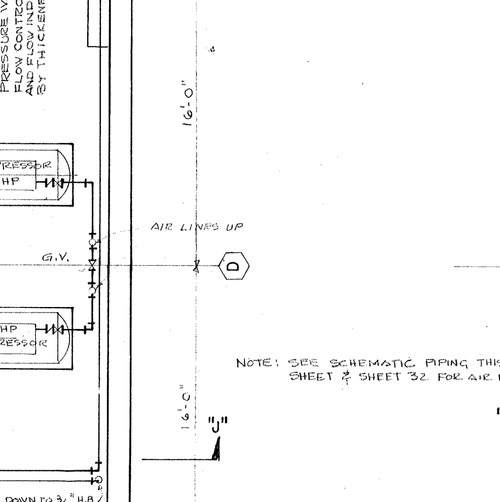

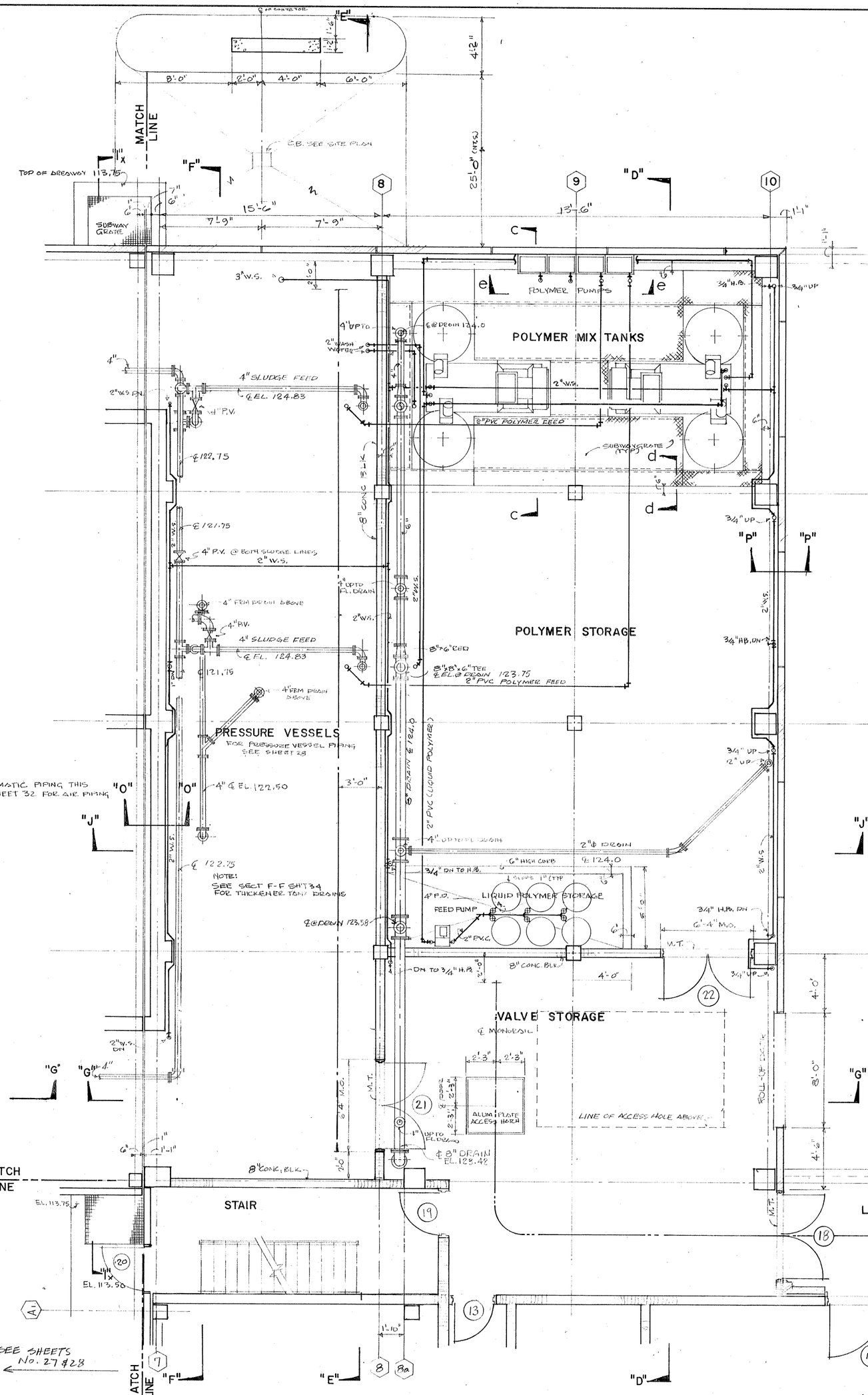

PARTIAL GROUND FLOOR PLAN-DEWATERING
1/4"=1'-0"

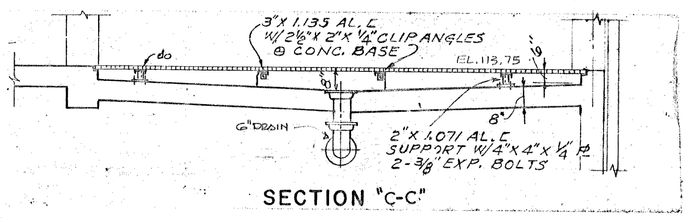

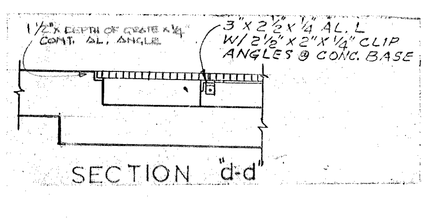

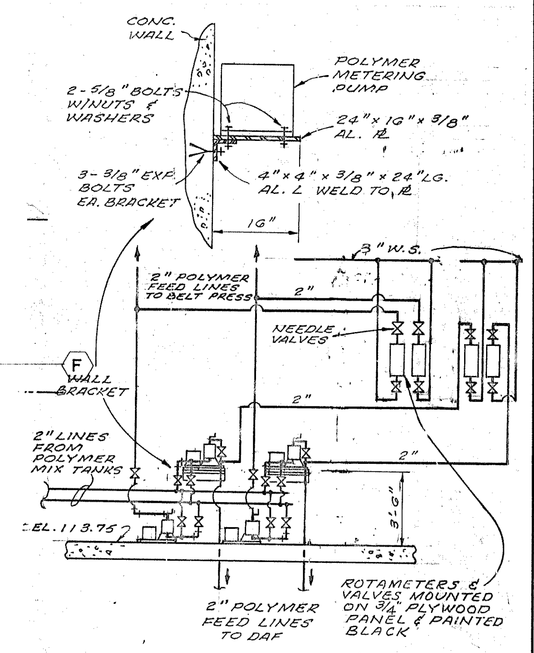

SECTION "e-e"

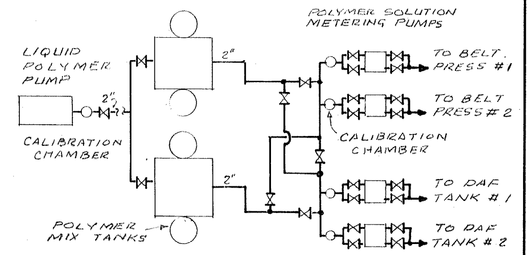

SCHEMATIC - POLYMER LINES
(ALL LINES 2" P.V.C. SCHEDULE 80)

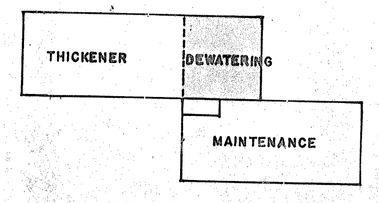

KEY PLAN

APPROVED
STATE OF GEORGIA
MAR 15 1984
WATER QUALITY CONTROL SECTION
ENVIRONMENTAL PROTECTION DIVISION
By Curtis C. Bissell Jr.

JACK C. DOZIER P.E.

GEORGIA REGISTERED No. 5021 PROFESSIONAL ENGINEER JOHN H. WIEDEMAN

EPA PROJECT NO. C130409

CITY OF BRUNSWICK, GEORGIA
SEWERAGE SYSTEM IMPROVEMENTS

ACADEMY CREEK PLANT
DEWATERING-MAINTENANCE BUILDING
PARTIAL LOWER LEVEL PLANS

SCALE	WIEDEMAN AND SINGLETON ENGINEERS	SHEET
AS NOTED	ATLANTA GEORGIA	29
DATE JAN., 1984		OF 39

AF 10479A-B

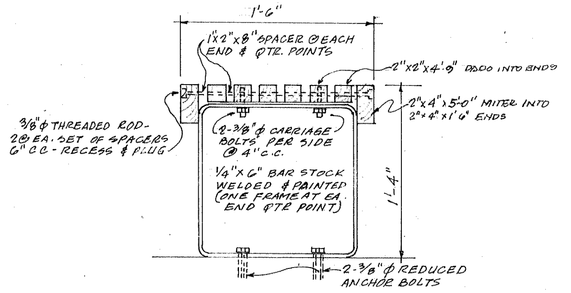

DETAIL AT BENCH @ MEN'S SHOWER

1½"=1'-0"

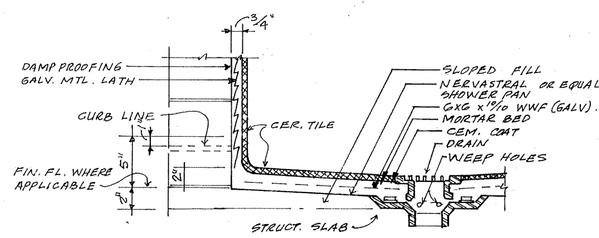

SECTION @ SHOWER PAN

N.T.S.

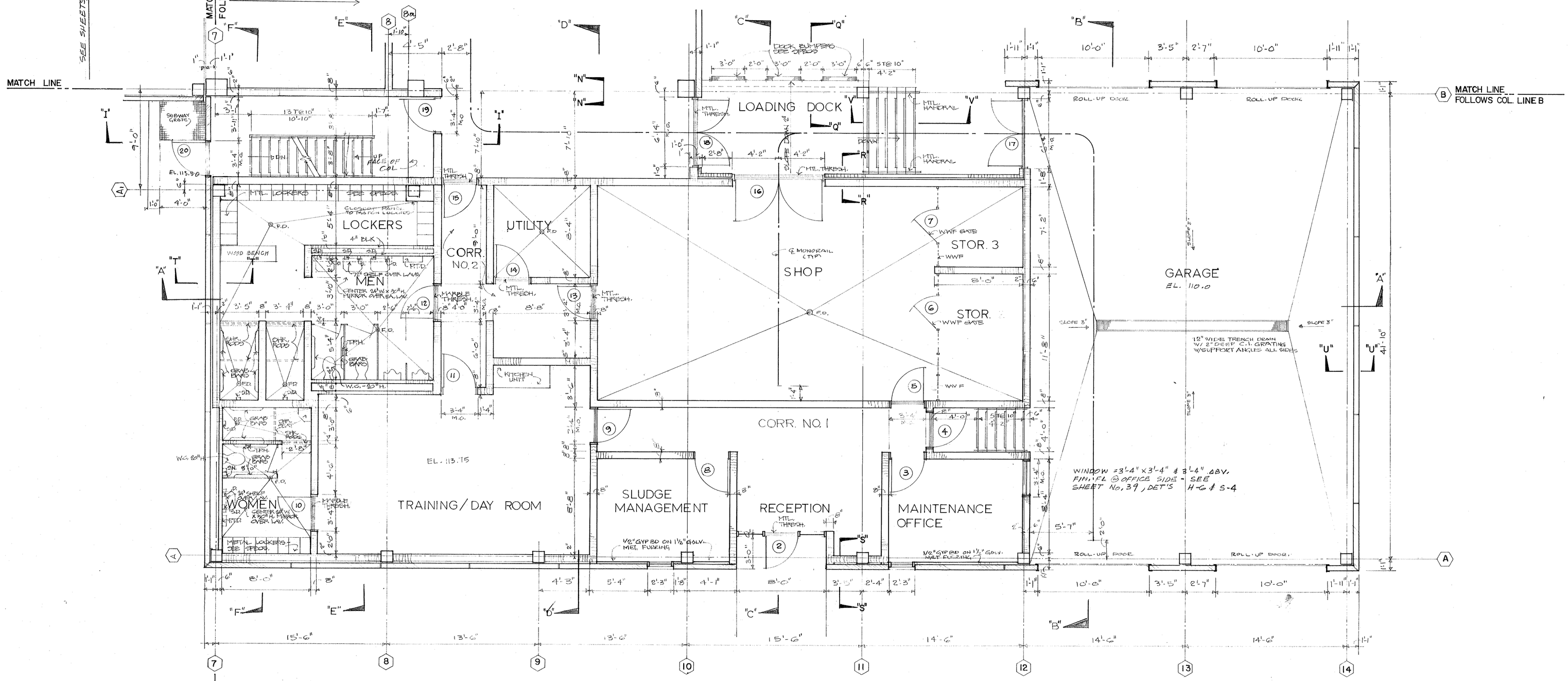

FLOOR PLAN

EL. 113.75 EXCEPT AS NOTED

SEE SHT. No. 39 FOR DOOR & FIN. SCHED.

TOILET ACCESSORIES SCHEDULE

ITEM	MDL.NO	MDL.BASIS	MTG.HT	APPROVD. MFRS	REMARKS
GRAB BARS	B-6912	BOBRICK	TOP 33"AFF	BOBRICK AMER.DISPENSER CO. BRADLEY OR EQUAL	2SB SERIES ANCHORS & PARTNS---COMPLY W/HANDICAPPED REG'S.
MIRROR	B-2986	BOBRICK	52"AFF	BOBRICK AMER. DISPENSER CO. BRADLEY OR EQUAL	
SHELF	B-296	BOBRICK	51"AFF	BOBRICK AMER.DISPENSER CO. BRADLEY OR EQUAL	
SHOWER SEAT	B-5103	BOBRICK	15"AFF	BOBRICK AMER.DISPENSER CO. BRADLEY OR EQUAL	STAINLESS STEEL
SOAP DISH	B-6807	BOBRICK	2"ABV SPLASH @ LAVS 48"AFF @ SHRS	BOBRICK AMER.DISPENSER CO. BRADLEY OR EQUAL	
SOAP DISPENSER	B-72	BOBRICK	BTM 2"ABV SPLSH	BOBRICK AMER. DISPENSER CO. BRADLEY OR EQUAL	
TOIL TISSUE HOLDER (PH)	B-274	BOBRICK	TOP 30"AFF	BOBRICK AMER.DISPENSER CO BRADLEY OR EQUAL	
TOWEL DISPENSER & DISPOSAL	B-2944	BOBRICK	TOP 60"AFF	BOBRICK AMER.DISPENSER CO. BRADLEY OR EQUAL	

ITEM	MDL/BASIS	APPRVD. MFRS
SAN. NAPK. DISPOSAL	B-354 (BOBRICK)	BOBRICK, AMER. DISPENSER CO., BRADLEY, OR EQ.
SHOWER CURTAIN ROD	B-207 (BOBRICK)	BOBRICK, AMER. DISPENSER CO., BRADLEY, OR EQ.

ABBREVIATION LEGEND

D	SOAP DISPENSER
FD	FLOOR DRAIN
PTD	PAPER TOWEL DISPENSER & RECEPTACLE
SD	SOAP DISH
SN	SANITARY NAPKIN RECEPTACLE
TPH	TOILET PAPER HOLDER
MTL	METAL
WC	WATER CLOSET
WWF	WELDED WIRE FENCE
MG	MASONRY OPENING

APPROVED
STATE OF GEORGIA
MAR 15 1984
WATER QUALITY CONTROL SECTION
ENVIRONMENTAL PROTECTION DIVISION
By Curtis E. Bardell Jr.

JACK C. DOZIER P.E.

GEORGIA REGISTERED No. 6021 PROFESSIONAL ENGINEER JOHN H. WIEDEMAN

EPA PROJECT NO. C130409

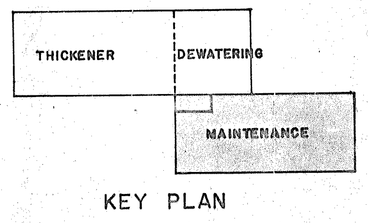

KEY PLAN

CITY OF BRUNSWICK, GEORGIA
SEWERAGE SYSTEM IMPROVEMENTS

ACADEMY CREEK PLANT

MAINTENANCE BUILDING

GROUND FLOOR PLAN

SCALE	WIEDEMAN AND SINGLETON ENGINEERS	SHEET
As Noted	ATLANTA GEORGIA	30
DATE		OF 39
JAN., 1984		

117

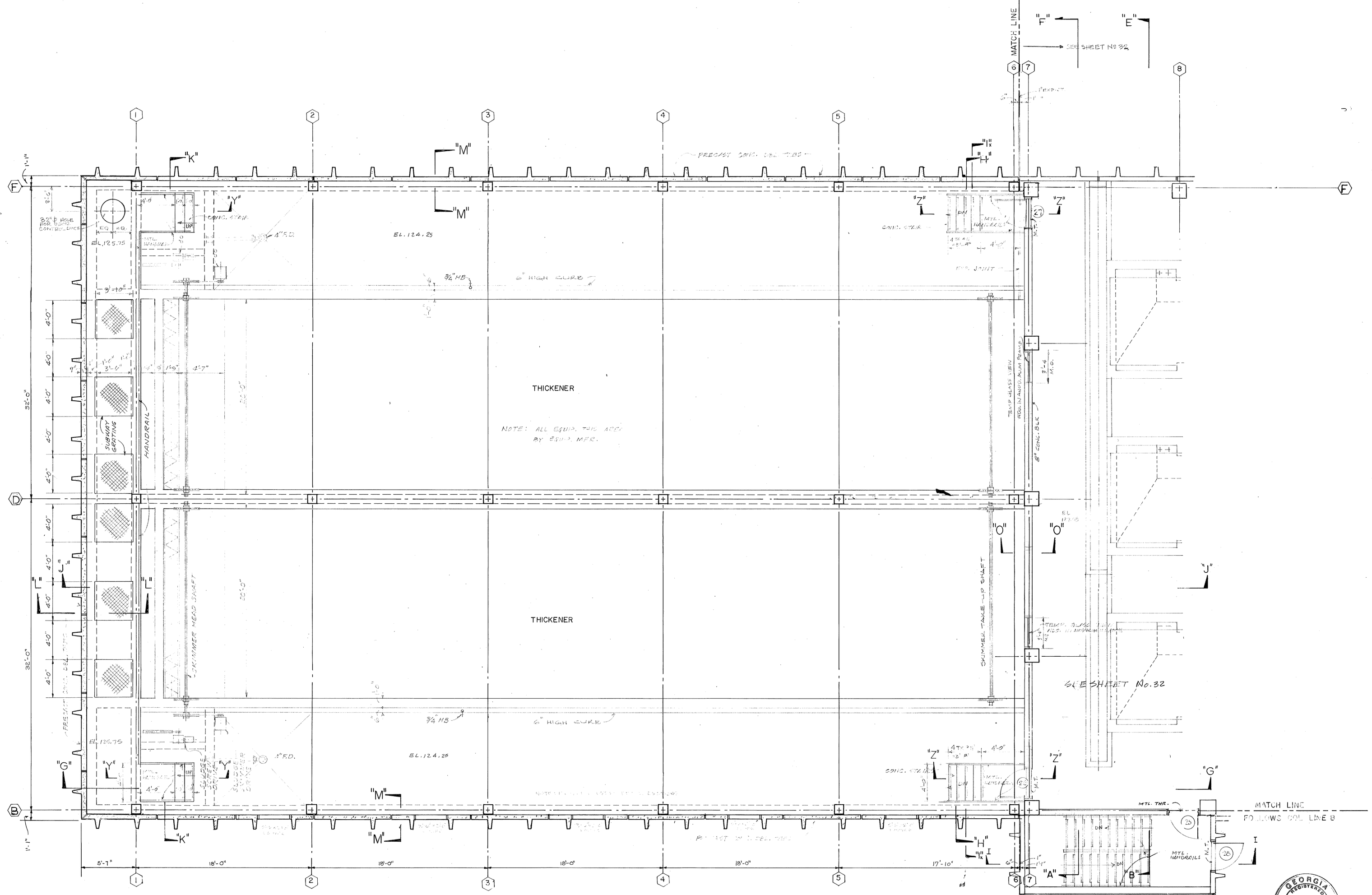

PLAN AT ELEV. 124.25
1/4"=1'-0"

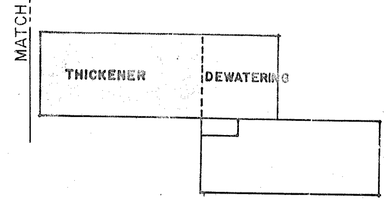

KEY PLAN

APPROVED
STATE OF GEORGIA
MAR 15 1984
WATER QUALITY CONTROL SECTION
ENVIRONMENTAL PROTECTION DIVISION
By Curtis E. Bassell Jr.

JACK C. DOZIER P.E.

GEORGIA REGISTERED No. 5021 PROFESSIONAL ENGINEER JOHN H. WIEDEMAN

EPA PROJECT NO. C130409

CITY OF BRUNSWICK, GEORGIA
SEWERAGE SYSTEM IMPROVEMENTS

ACADEMY CREEK PLANT
FLOTATION THICKENER
PLAN AT ELEV. 124.25

SCALE	WIEDEMAN AND SINGLETON ENGINEERS	SHEET
1/4"=1'-0" DATE JAN., 1984	ATLANTA GEORGIA	31 OF 39

AF 10479A-B

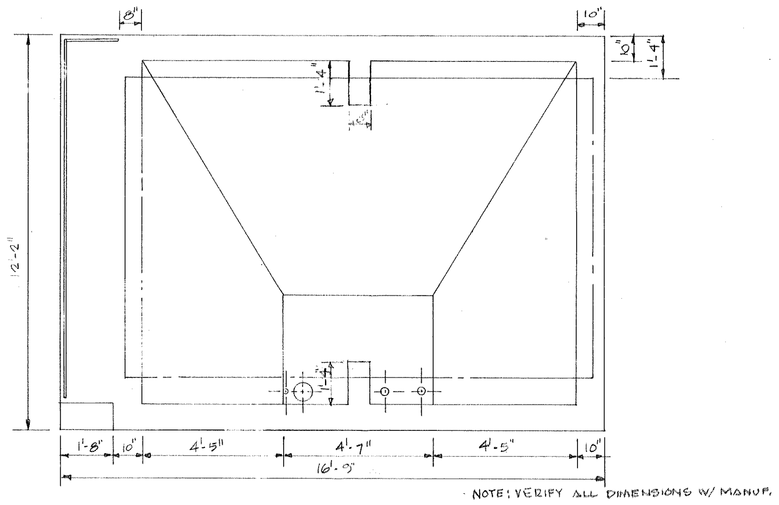

NOTE: VERIFY ALL DIMENSIONS W/ MANUF.

PLAN

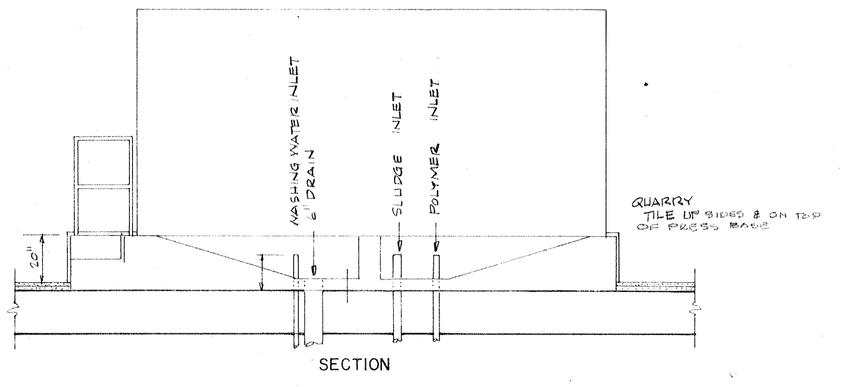

SECTION

BELT FILTER PRESS DETAILS

3/8" = 1'-0"

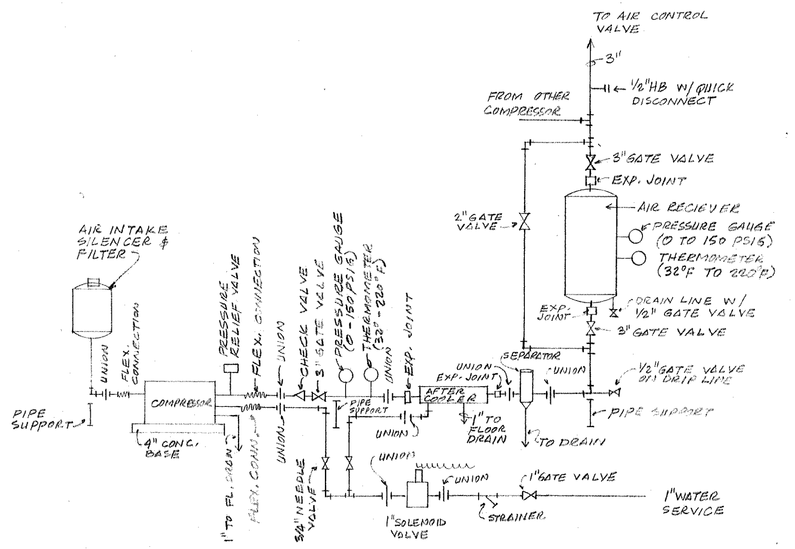

AIR COMPRESSOR SCHEMATIC

(N.T.S.)

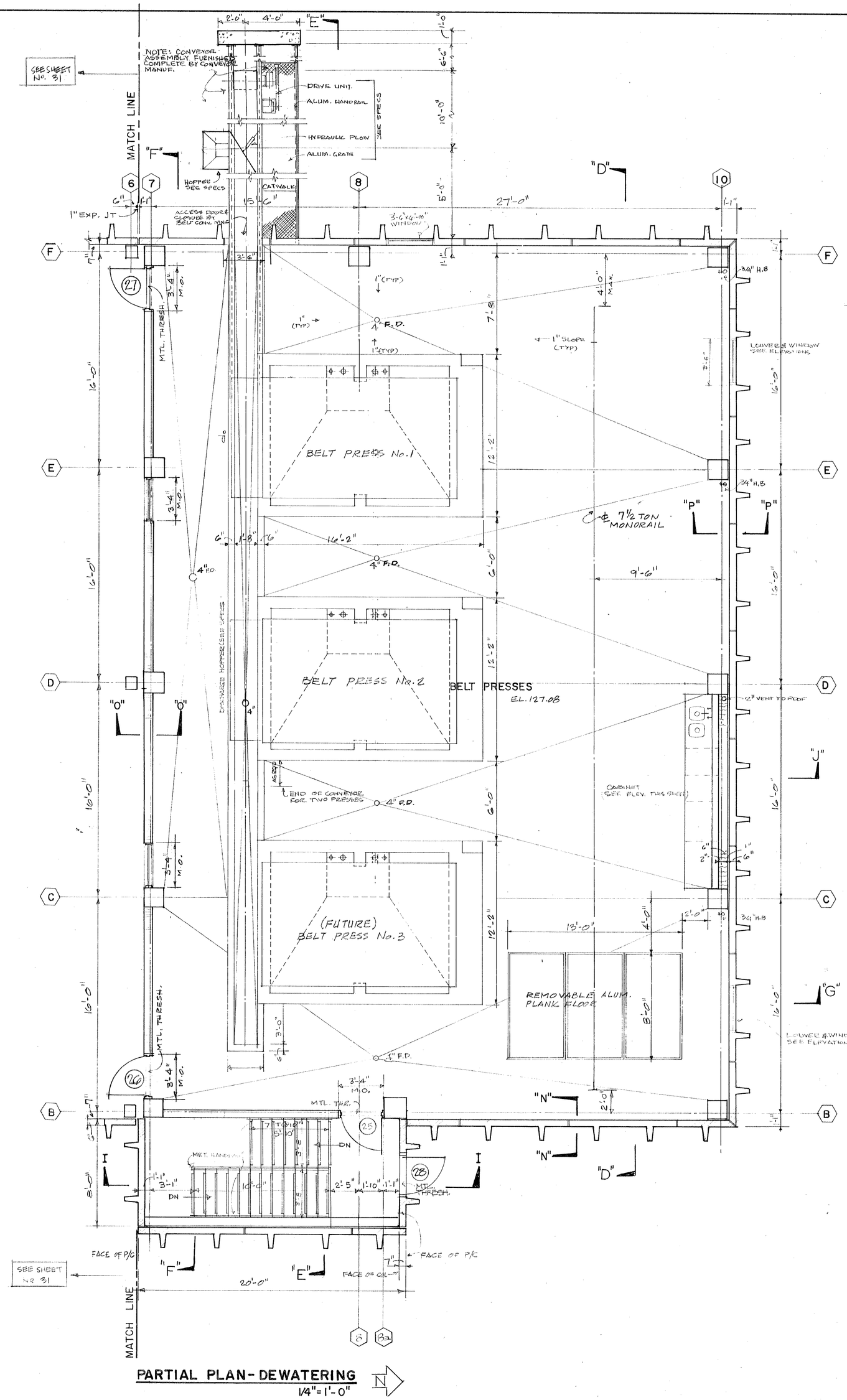

PARTIAL PLAN - DEWATERING

1/4" = 1'-0"

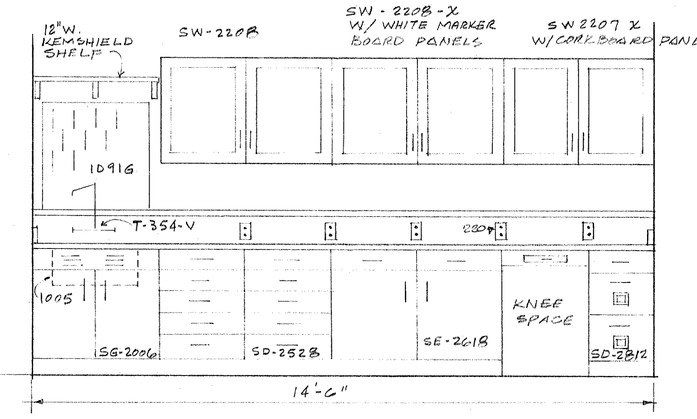

CABINET ELEVATION

1/2" = 1'-0"

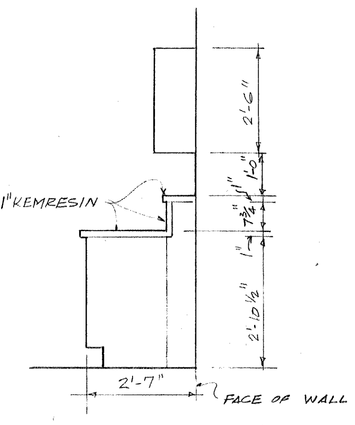

CABINET SECTION

1/2" = 1'-0"

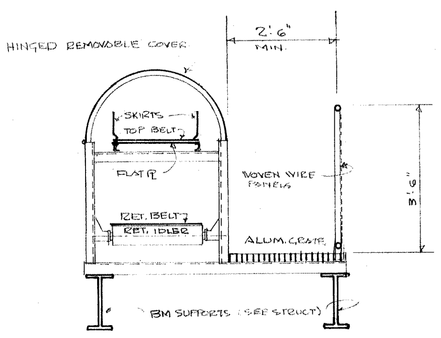

SCHEMATIC SECTION AT BELT CONVEYOR

SEE SPECS

APPROVED
STATE OF GEORGIA
MAR 15 1984
WATER QUALITY CONTROL SECTION
ENVIRONMENTAL PROTECTION DIVISION
By Curtis L. Cardell Jr.

JACK C. DOZIER P.E.

GEORGIA REGISTERED No. 5021 PROFESSIONAL ENGINEER JOHN H. WIEDEMAN

EPA PROJECT NO. C130409

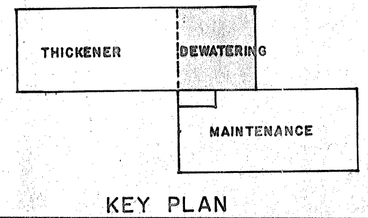

KEY PLAN

CITY OF BRUNSWICK, GEORGIA
SEWERAGE SYSTEM IMPROVEMENTS

ACADEMY CREEK PLANT

DEWATERING-MAINTENANCE BUILDING
PARTIAL SECOND FLOOR PLAN

SCALE	WIEDEMAN AND SINGLETON ENGINEERS	SHEET
AS SHOWN		32
DATE		OF 39
JAN., 1984	ATLANTA GEORGIA	

43

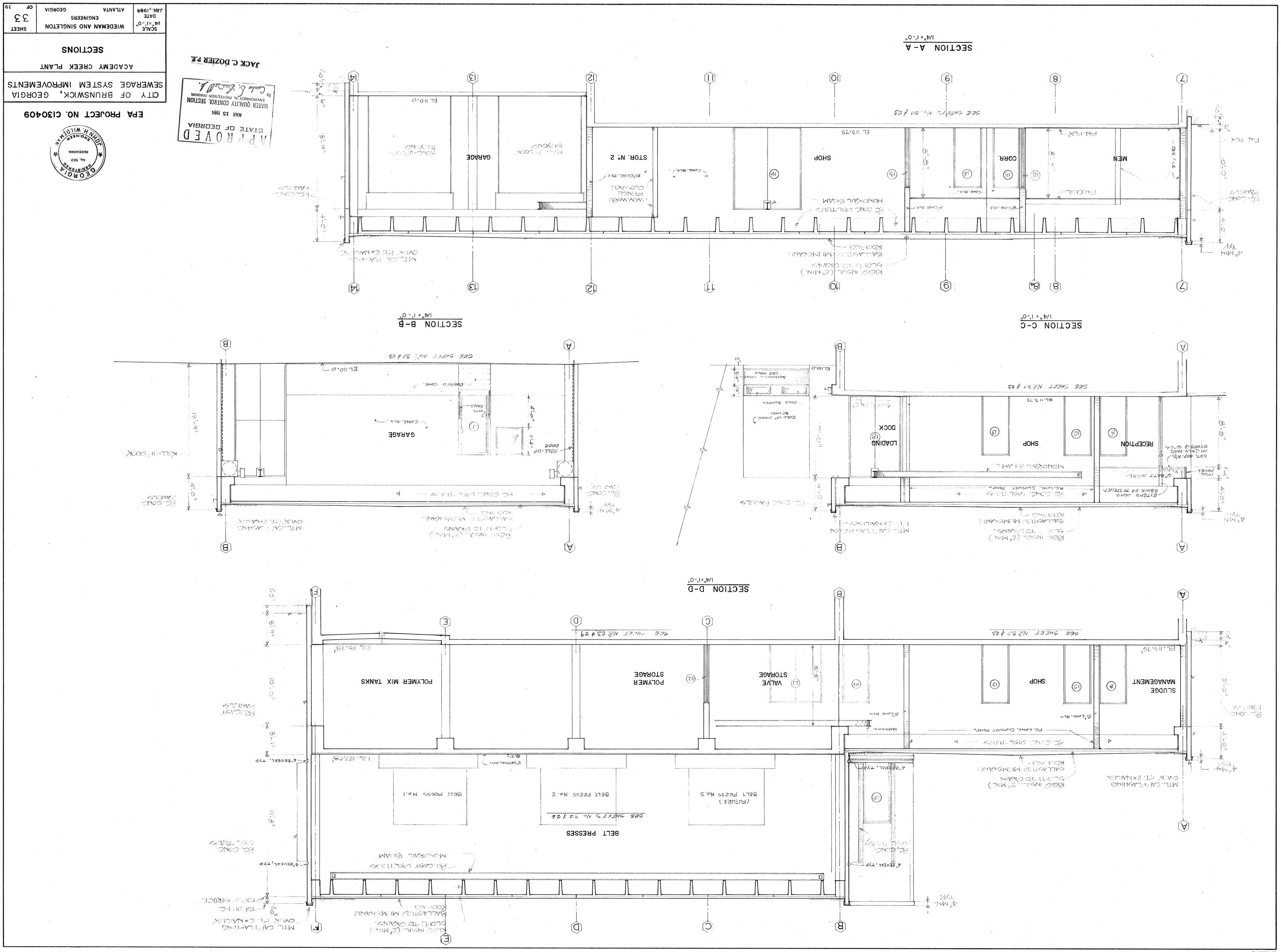

EPA PROJECT NO. C130409
CITY OF BRUNSWICK, GEORGIA
SEWERAGE SYSTEM IMPROVEMENTS
ACADEMY CREEK PLANT
SECTIONS
SCALE 1/4"=1'-0"
DATE JAN.,1984
WIEDEMAN AND SINGLETON ENGINEERS
ATLANTA GEORGIA
SHEET 33 OF 39
APPROVED
STATE OF GEORGIA
MAR 15 1984
WATER QUALITY CONTROL SECTION
ENVIRONMENTAL PROTECTION DIVISION
JACK C. DOZIER P.E.
GEORGIA REGISTERED PROFESSIONAL ENGINEER JOHN H. WIEDEMAN
SECTION A-A
1/4"=1'-0"
SECTION B-B
1/4"=1'-0"
SECTION C-C
1/4"=1'-0"
SECTION D-D
1/4"=1'-0"
GARAGE
STOR. No. 2
SHOP
CORR.
MEN
LOADING DOCK
RECEPTION
POLYMER MIX TANKS
POLYMER STORAGE
VALVE STORAGE
SLUDGE MANAGEMENT
BELT PRESSES
BELT PRESS No. 1
BELT PRESS No. 2
BELT PRESS No. 3
(FUTURE)

CITY OF BRUNSWICK, GEORGIA
SEWERAGE SYSTEM IMPROVEMENTS

ACADEMY CREEK PLANT

SECTIONS

SCALE	WIDEMAN AND SINGLETON	SHEET
1/4"=1'-0"	ENGINEERS	34
DATE	ATLANTA GEORGIA	OF 39
JAN.,1984		

APPROVED
STATE OF GEORGIA
MAR 15 1984
WATER QUALITY CONTROL SECTION
ENVIRONMENTAL PROTECTION DIVISION
BY Charles E. Dozier P.E.

JACK C. DOZIER P.E.

EPA PROJECT NO. C130409

GEORGIA REGISTERED ENGINEER PROFESSIONAL No. 5021 JOHN H. WIDEMAN

DETAIL X-X

DETAIL OF ALUMINUM PLATE COVER AT PRESSURE TANKS

N.T.S.

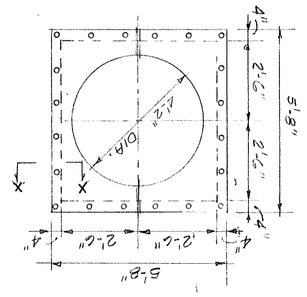

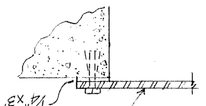

SECTION F-F

1/4"=1'-0"

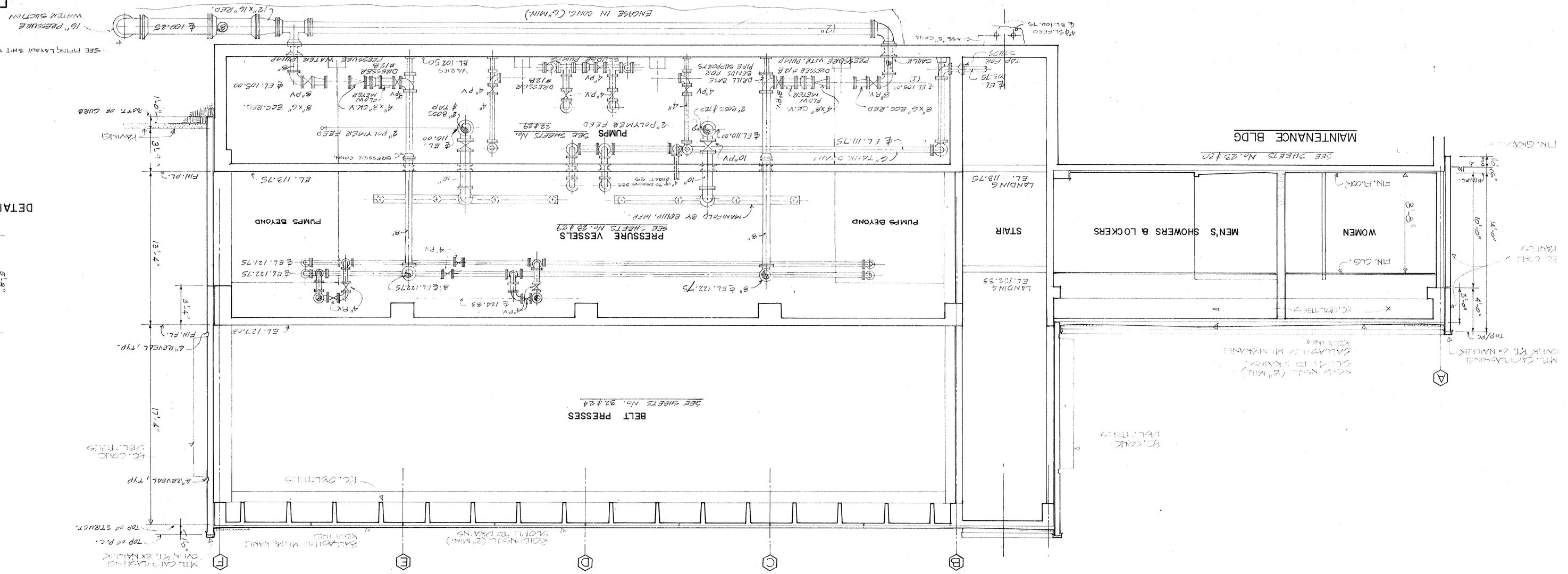

SECTION E-E

1/4"=1'-0"

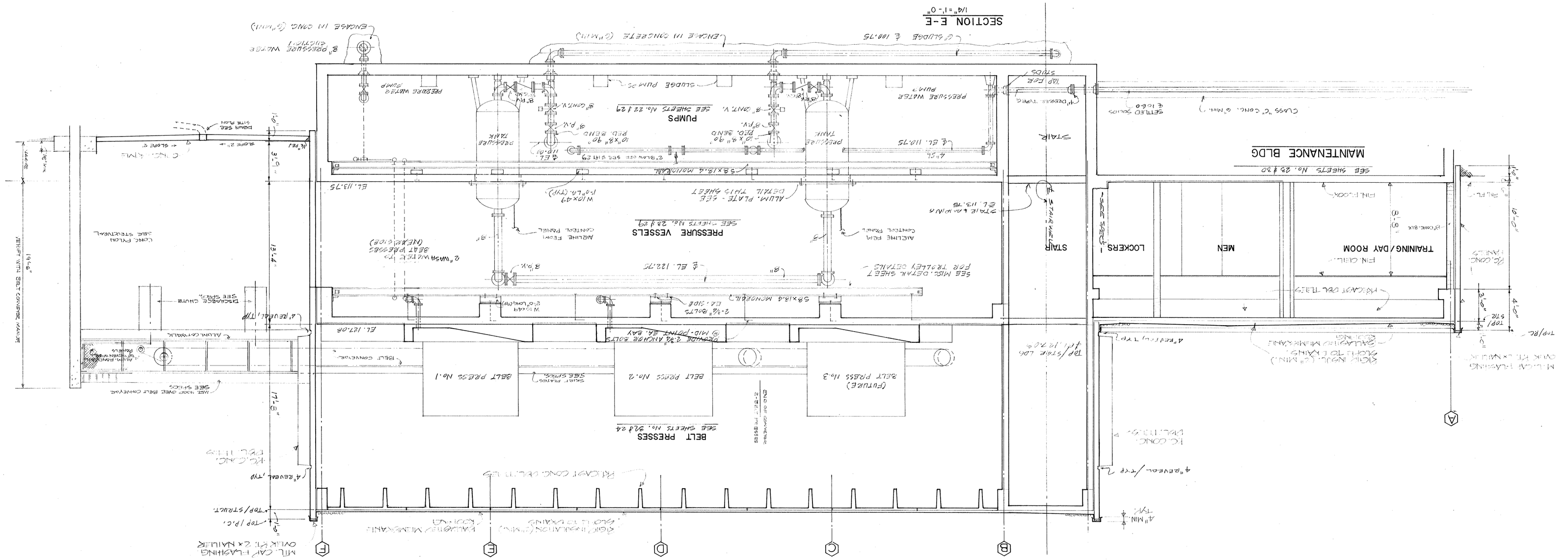

AP 10479A-B

AF 10479A-B

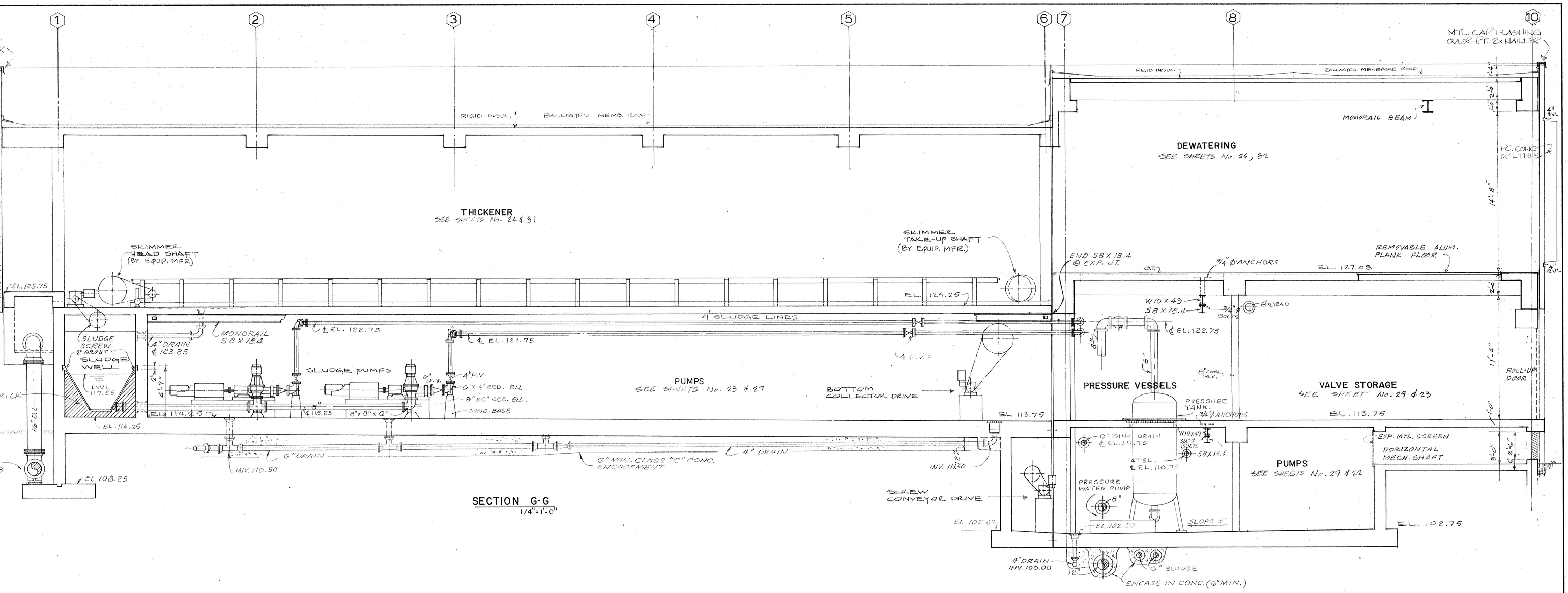

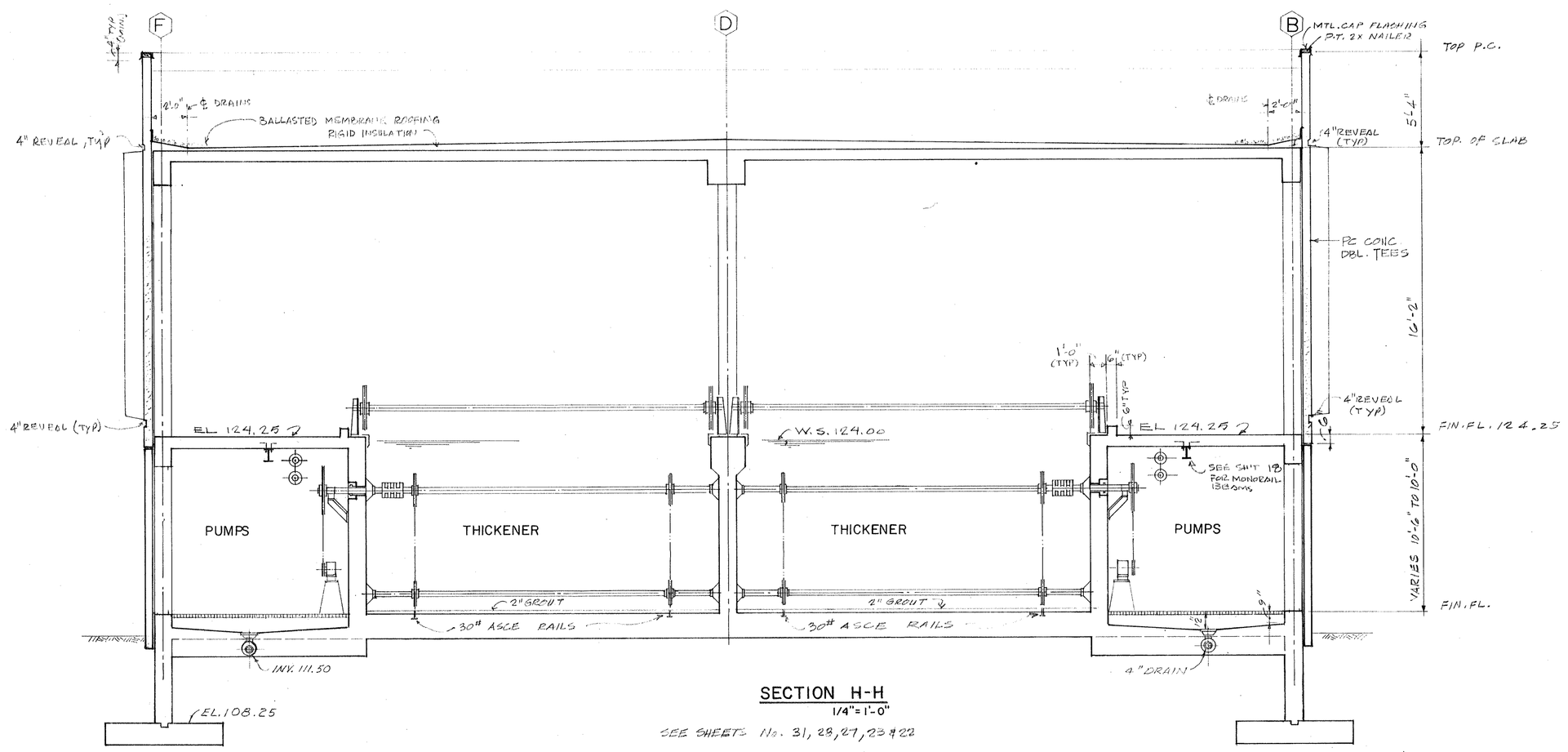

APPROVED
STATE OF GEORGIA
MAR 15 1984
WATER QUALITY CONTROL SECTION
ENVIRONMENTAL PROTECTION DIVISION
By Curtis E. Bissell Jr.

JACK C. DOZIER P.E.

GEORGIA REGISTERED No. 5021 PROFESSIONAL ENGINEER JOHN H. WIEDEMAN

EPA PROJECT NO. C130409

CITY OF BRUNSWICK, GEORGIA
SEWERAGE SYSTEM IMPROVEMENTS

ACADEMY CREEK PLANT

FLOTATION THICKENER SECTIONS

SCALE	WIEDEMAN AND SINGLETON ENGINEERS	SHEET
1/4"= 1'-0"		35
DATE JAN., 1984	ATLANTA GEORGIA	OF 39

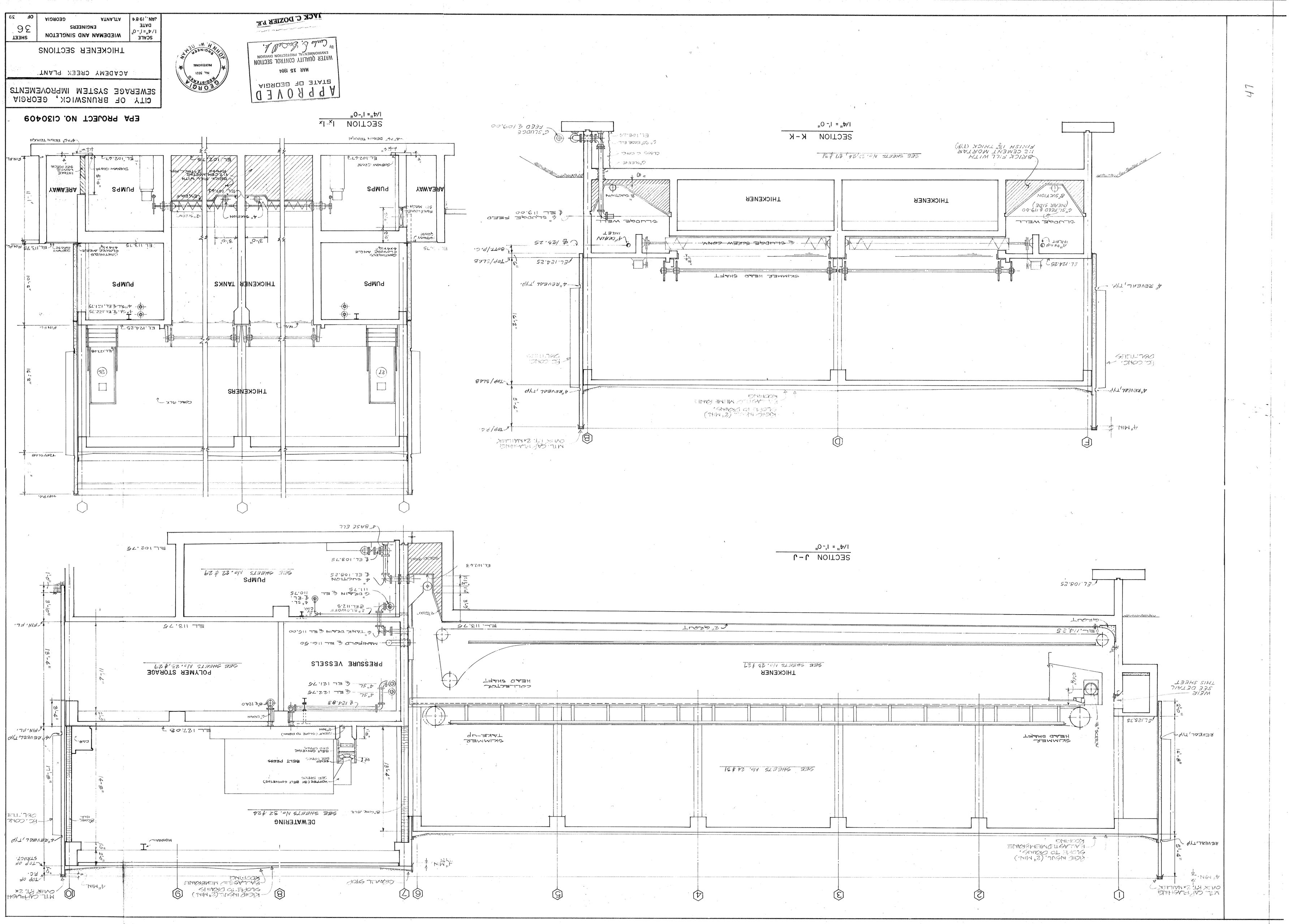

CITY OF BRUNSWICK, GEORGIA
SEWERAGE SYSTEM IMPROVEMENTS
ACADEMY CREEK PLANT
THICKENER SECTIONS
SCALE 1/4"=1'-0"
DATE JAN. 1984
WIEDEMAN AND SINGLETON ENGINEERS
ATLANTA GEORGIA
SHEET 36 OF 39
APPROVED
STATE OF GEORGIA
MAR 15 1984
WATER QUALITY CONTROL SECTION
ENVIRONMENTAL PROTECTION DIVISION
JACK C. DOZIER P.E.
EPA PROJECT NO. C130409
SECTION I-I
1/4"=1'-0"
SECTION K-K
1/4"=1'-0"
SECTION J-J
1/4"=1'-0"
PUMPS
AREAWAY
THICKENER TANKS
THICKENERS
SLUDGE WELL
SKIMMER HEAD SHAFT
PRESSURE VESSELS
POLYMER STORAGE
DEWATERING
BELT PRESS
COLLECTOR HEAD SHAFT
SKIMMER TAKE-UP

47

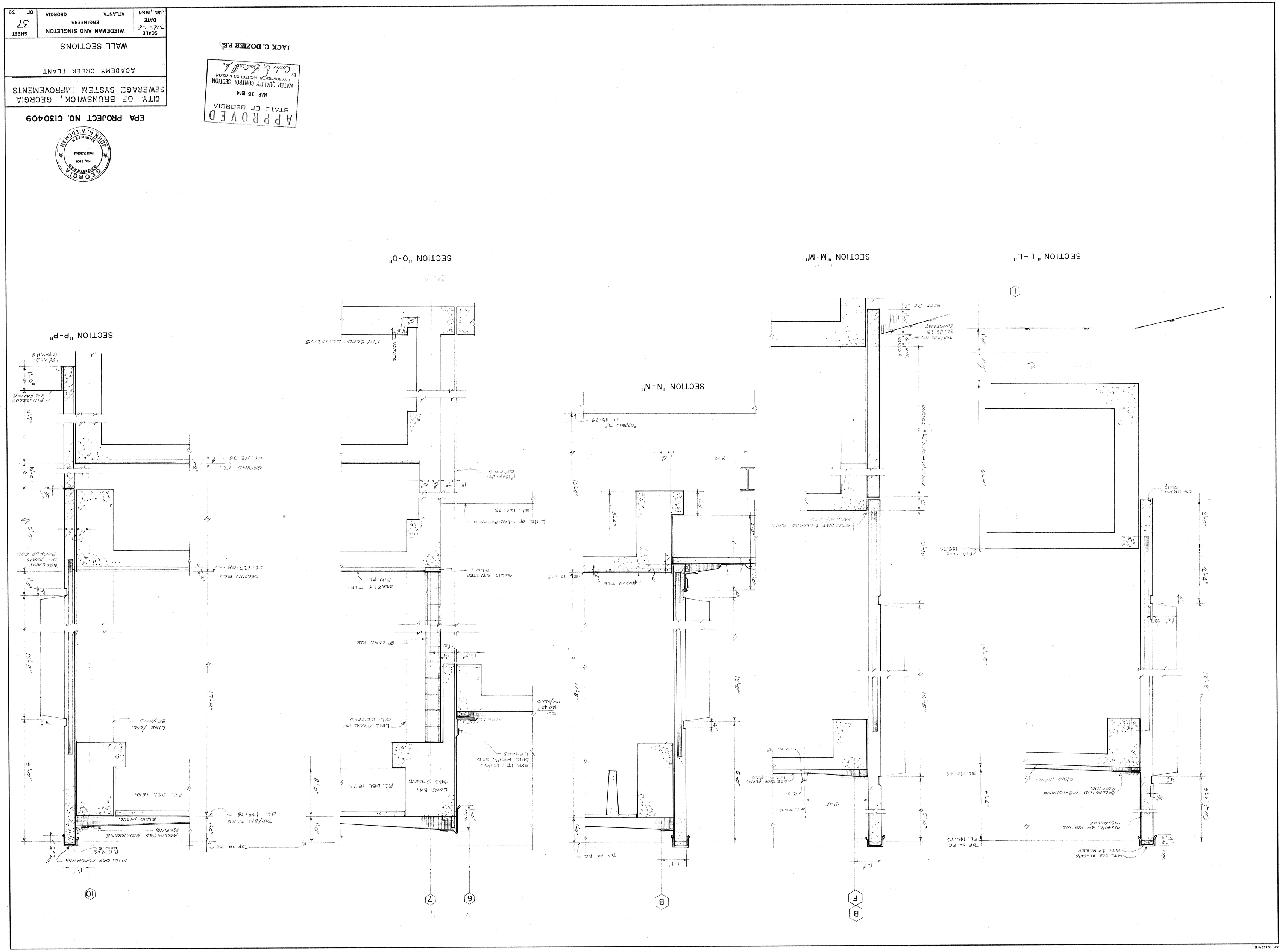

EPA PROJECT NO. C130409

CITY OF BRUNSWICK, GEORGIA
SEWERAGE SYSTEM IMPROVEMENTS

ACADEMY CREEK PLANT

WALL SECTIONS

SCALE 3/4"=1'-0" DATE JAN.,1984	WIEDEMAN AND SINGLETON ENGINEERS ATLANTA GEORGIA	SHEET 37 OF 39

APPROVED
STATE OF GEORGIA
MAR 15 1984
WATER QUALITY CONTROL SECTION
ENVIRONMENTAL PROTECTION DIVISION
By Cecilia E. Gerald Jr.

JACK C. DOZIER P.E.

GEORGIA REGISTERED ENGINEER JOHN H. WIEDEMAN No. 5021 PROFESSIONAL

AF 10473A-B

AF 10479A-B

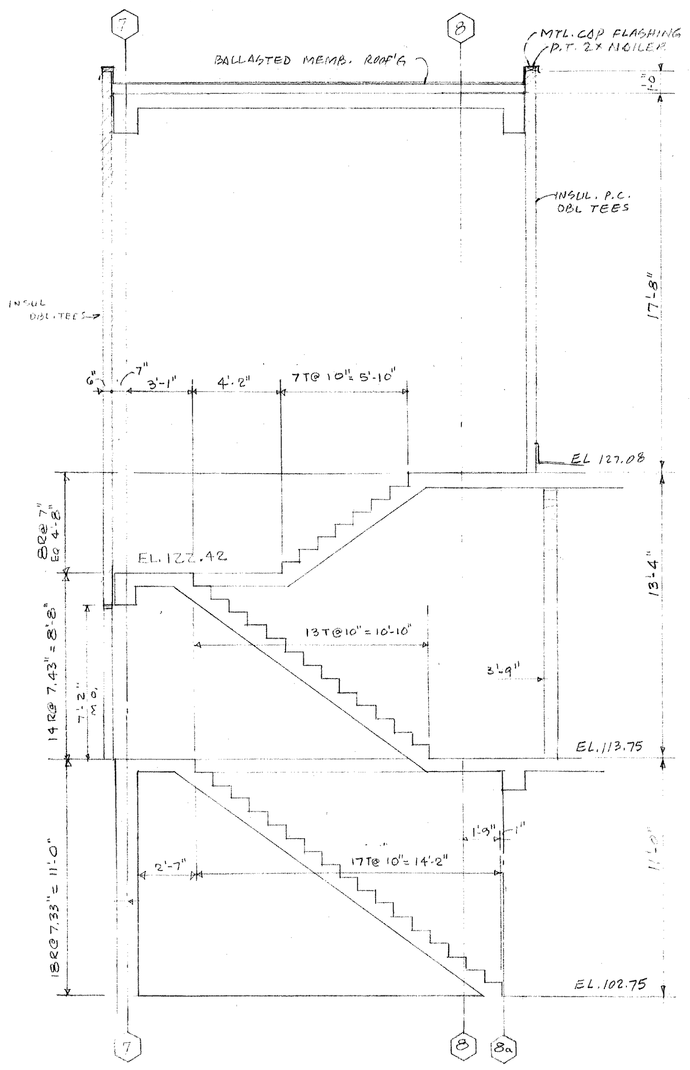

SECTION "I-I"
1/4" = 1'-0"

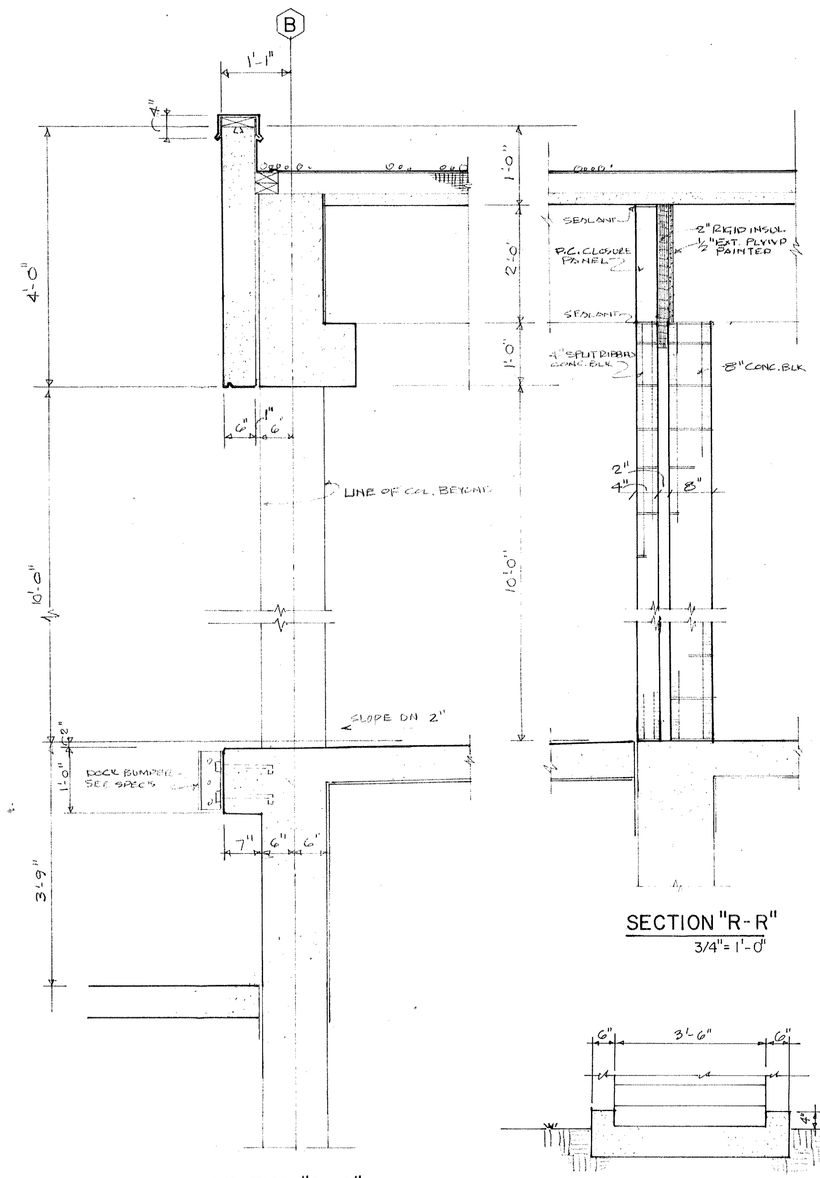

SECTION "Q-Q"
3/4" = 1'-0"

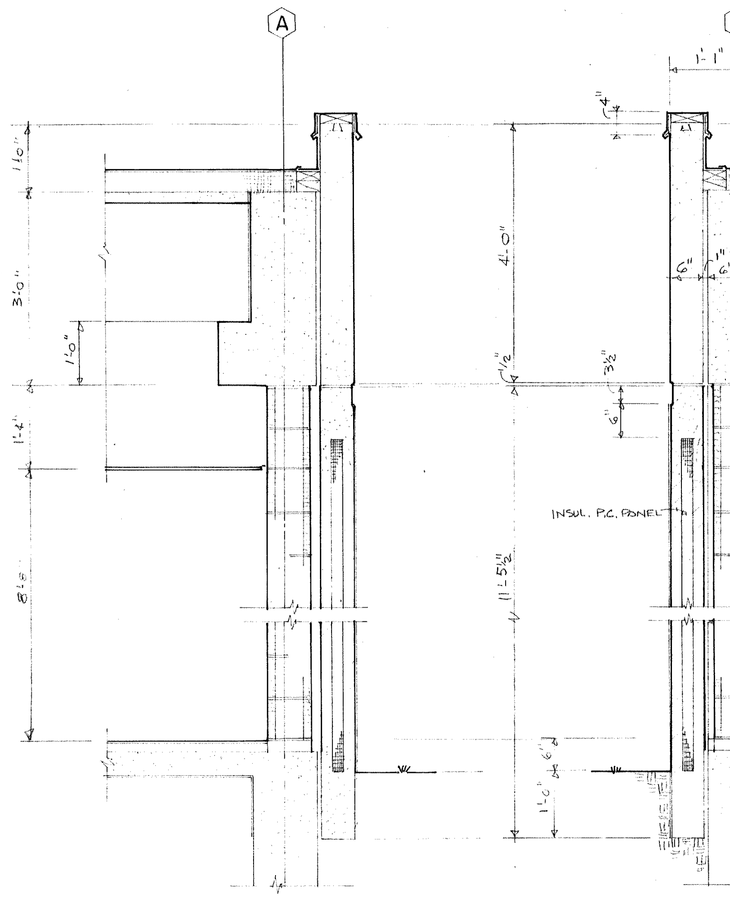

SECTION "S-S"
3/4" = 1'-0"

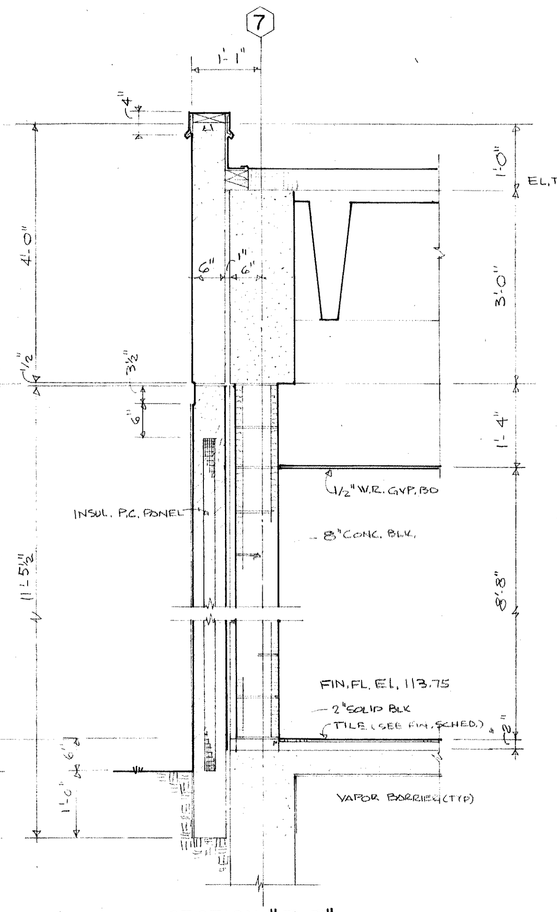

SECTION "T-T"
3/4" = 1'-0"

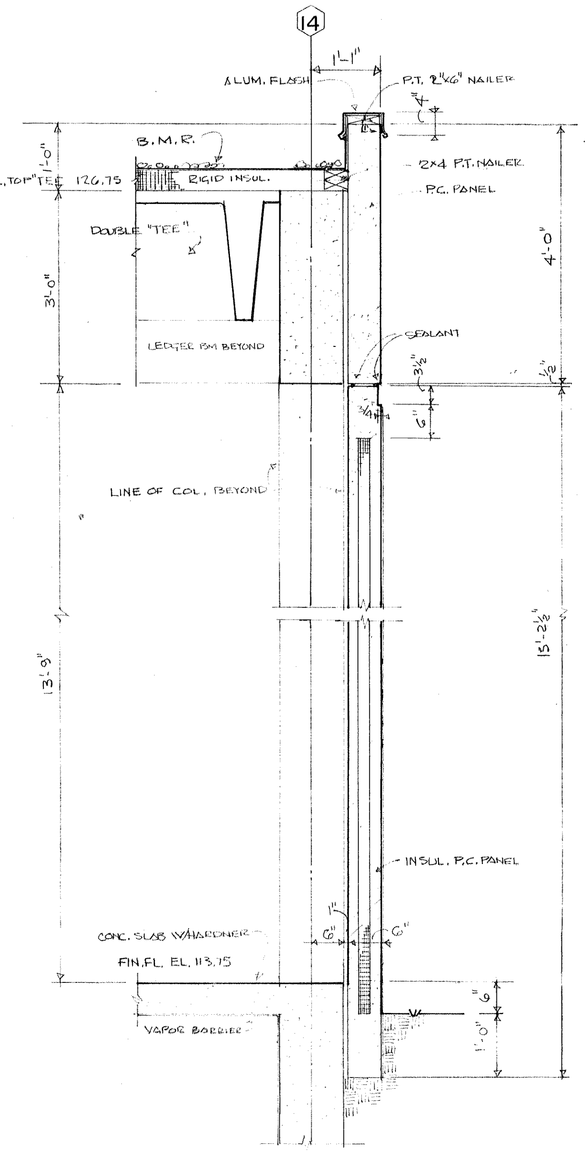

SECTION "U-U"
3/4" = 1'-0"

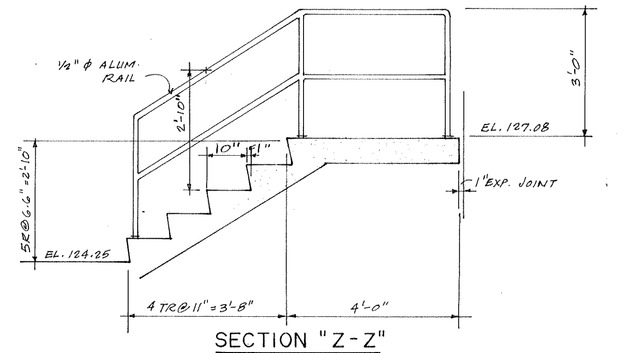

SECTION "Z-Z"
1/2" = 1'-0"

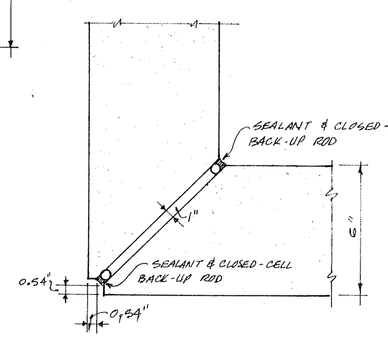

CORNER JOINT
3" = 1'-0"

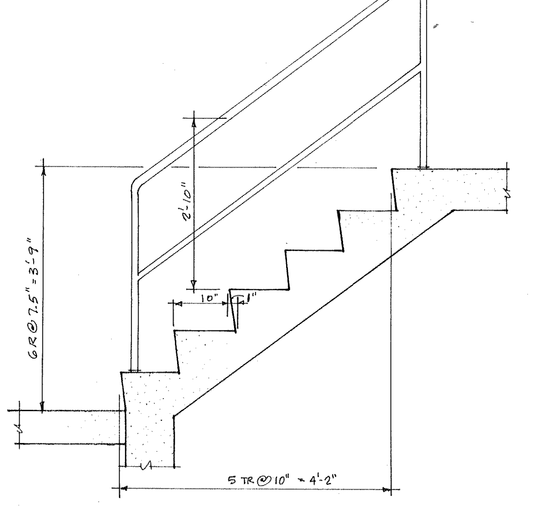

SECTION "V-V"
3/4" = 1'-0"

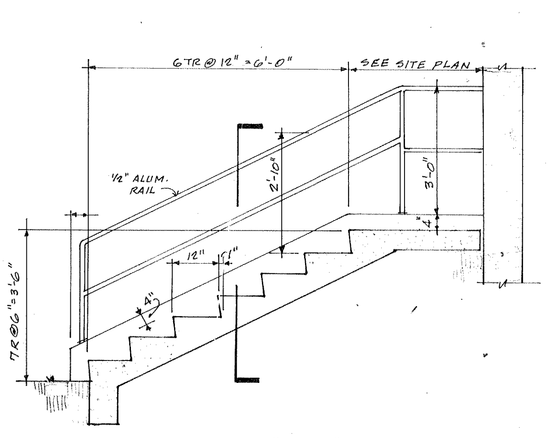

SECTION "W-W"
1/2" = 1'-0"

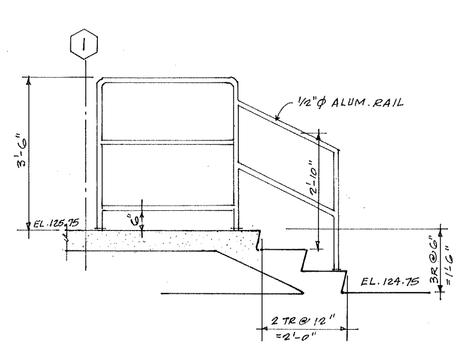

SECTION "Y-Y"
1/2" = 1'-0"

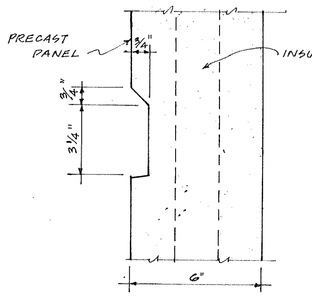

REVEAL DETAIL
3" = 1'-0"

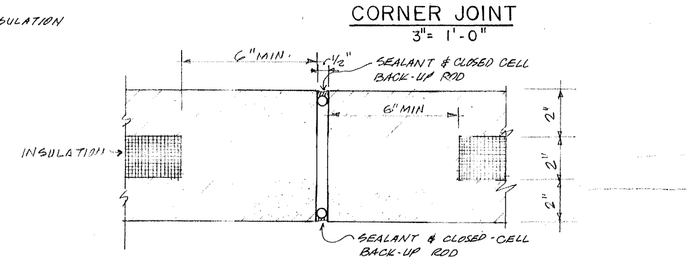

BUTT JOINT
3" = 1'-0"

PRECAST PANEL DETAILS

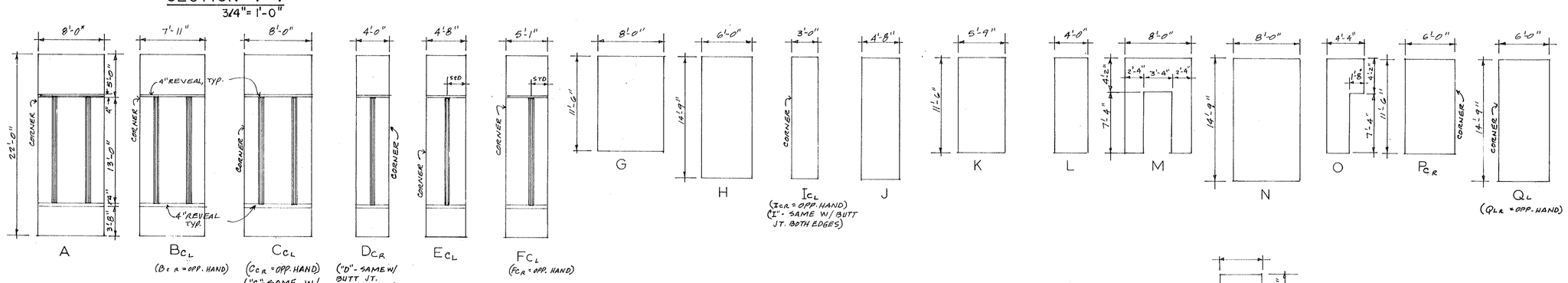

PRECAST PANEL ELEVATIONS

NOTES: 1) SEE ROOF PLAN & DETAILS FOR LOCATION & SIZES OF OVERFLOW & SCUPPER OPENINGS.
2) SEE ELEVATIONS, SHEET No. 26 (PANEL TYPES NOTED IN "△")
3) PANELS "A" - "F" TO BE DBL. TEES, INSUL.
4) PANELS "G - Z" TO BE TEXT. PRECAST, INSUL.

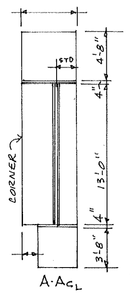

GEORGIA REGISTERED No. 5021 PROFESSIONAL ENGINEER JOHN H. WIEDEMAN

APPROVED
STATE OF GEORGIA
MAR 15 1984
WATER QUALITY CONTROL SECTION
ENVIRONMENTAL PROTECTION DIVISION
By Curtis E. Bissell Jr.

JACK C. DOZIER P.E.

EPA PROJECT NO. C130409

CITY OF BRUNSWICK, GEORGIA
SEWERAGE SYSTEM IMPROVEMENTS

ACADEMY CREEK PLANT

WALL SECTION & DETAILS

SCALE	WIEDEMAN AND SINGLETON ENGINEERS	SHEET
AS NOTED		38
DATE		OF 39
JAN., 1984	ATLANTA GEORGIA	

AF 10479A-B

DOOR & FRAME SCHEDULE

NO.	DOOR TYPE	DOOR SIZE	MAT.	FRAME TYPE	FRAME HEAD	FRAME JAMB	FRAME SILL	GRILLE	HDW SET	REMARKS
1	A	3'-0" x 7'-2"	ALUM. CLAD H.M.	(A)	H-1	J-1	—	—	HW-6	1½ HR "B" LABEL
2	D	3'-0" x 7'-2"	ALUM. & GLS	SEE ELEV'S	H-5	SEE ELEV'S	SEE ELEV'S	—	HW-1	SEE ELEV'S. & DET'S.
3	A	3'-0" x 7'-2"	ALUM	(A)	H-2	J-2	—	—	HW-7	
4	A	3'-0" x 7'-2"	ALUM	(A)	H-2	J-2	S-1	—	HW-7	VISION PANEL
5	—	3'-0" x 7'-0"	WWF	—	—	—	—	—	HW-7	SEE ELEV. THIS SHEET
6	—	3'-0" x 7'-0"	WWF	—	—	—	—	—	HW-15	SEE ELEV. THIS SHEET
7	—	3'-0" x 7'-0"	WWF	—	—	—	—	—	HW-15	SEE ELEV. THIS SHEET
8	A	3'-0" x 7'-2"	ALUM	(A)	H-2	J-2	S-1 (SIM.)	—	HW-15	
9	A	3'-0" x 7'-2"	ALUM	(A)	H-2	J-2	S-2	—	HW-7	VISION PANEL
10	A	3'-0" x 7'-2"	ALUM	(A)	H-2	J-3	S-1 (SIM)	—	HW-8	VISION PANEL
11	A	3'-0" x 7'-2"	ALUM	(A)	H-2	J-3	—	—	HW-9	
12	A	3'-0" x 7'-2"	ALUM	(A)	H-2	J-3	S-2	—	HW-8	VISION PANEL
13	A	3'-0" x 7'-2"	ALUM	(A)	H-2	J-2	S-1 (SIM)	—	HW-7	
14	A	3'-0" x 7'-2"	ALUM	(A)	H-2	J-2	S-1 (SIM)	4SF-LOW	HW-7	VISION PANEL
15	A	3'-0" x 7'-2"	ALUM	(A)	H-2	J-2	S-1 (SIM)	—	HW-9	
16	B	PAIR 3'-0" x 7'-2"	ALUM	(B)	H-4	J-5	S-1 (SIM)	—	HW-4	
17	C	PAIR 3'-0" x 13'-9"	ALUM	(C)	H-4	J-3 & J-5	S-1 (SIM)	—	HW-3	
18	E	PAIR 3'-0" x 10'-0"	ALUM	(D)	H-4	J-3 & J-5	S-1 (SIM)	—	HW-5	
19	A	3'-0" x 7'-2"	ALUM CLAD	(A)	H-1	J-1	—	—	HW-6	1½ HR "B" LABEL
20	A	3'-0" x 7'-2"	ALUM	(A)	H-3	J-4	S-1 (SIM)	—	HW-2	
21	B	PAIR 3'-0" x 7'-2"	ALUM	(B)	H-2	J-2	S-2 (SIM)	4SF-LOW EA. LEAF	HW-10	VISION PANEL
22	E	PAIR 3'-0" x 10'-0"	ALUM	(D)	H-2	J-2 & J-3	—	4SF-LOW EA. LEAF	HW-10	VISION PANEL
23	A	3'-0" x 7'-2"	ALUM	(A)	H-3	J-4	S-2 (SIM)	—	HW-2	
24	A	3'-0" x 7'-2"	ALUM	(A)	H-3	J-4	S-2 (SIM)	—	HW-2	
25	A	3'-0" x 7'-2"	ALUM CLAD	(A)	H-1	J-1	S-2 (SIM)	—	HW-11	1½ HR "B" LABEL
26	A	3'-0" x 7'-2"	ALUM	(A)	H-2	J-2 & J-3	—	—	HW-12	VISION PANEL
27	A	3'-0" x 7'-2"	ALUM	(A)	H-2	J-2 & J-3	—	—	HW-12	VISION PANEL
28	A	3'-0" x 7'-2"	ALUM CLAD	(A)	H-3	J-4	—	—	HW-13	1½ HR "B" LABEL

FINISH SCHEDULE

MAINTENANCE BLDG. (CORR. No. 1 through CORR. No. 2)

AREA	FLOOR MAT.	FLOOR FIN.	BASE MAT.	BASE HT.	WALLS MAT.	WALLS FIN.	CEILINGS MAT.	CEILINGS FIN.	CEILINGS HT.	REMARKS
STAIR	CONC.	BROOM W/ SEALER	—	—	CONC. & CONC. BLK	PAINT	CONC.	PAINT	VARIES	SEE PLANS, SPEC'S & SECTIONS
PUMPS	CONC.	STL. TRL. W/SEALER	—	—	CONC.	PAINT	CONC.	PAINT	VARIES	SEE PLANS, SPECS & SECTIONS
HORIZ. MECH. SHFT.	CONC.	STL. TRL. W/SEALER	—	—	CONC	—	CONC	—	SEE DWGS	
CORR. No. 1	CONC.	CARPET	RESIL.	4"	CONC. BLK	PAINT	2x4 ACOUST. LAY-IN	STD	8'-8"	
RECEPTION	CONC.	CARPET	RESIL.	4"	CONC. BLK	PAINT	2x4 ACOUST. LAY-IN	STD	8'-8"	
MAINT. OFFICE	CONC.	CARPET	RESIL.	4"	CONC. BLK	PAINT	2x4 ACOUST. LAY-IN	STD	8'-8"	
STOR. #2, #3	CONC.	SEALER	—	—	CONC. BLK	PAINT	DBL. TEES	PAINT	SEE DWGS	
SHOP	CONC.	SEALER	—	—	CONC. BLK	PAINT	DBL. TEES	PAINT	SEE DWGS	
GARAGE	CONC.	SEALER	—	—	CONC. & CONC. BLK	PAINT	DBL. TEES	PAINT	SEE DWGS.	NOTE: INCL STAIR TO CORR. NO. 1
LOADING DOCK	CONC.	BROOM W/ SEALER	—	—	CONC. BLK. & PRECAST CONC.	PAINT	DBL. TEES	PAINT	SEE DWGS.	
SLUDGE MGMT	CONC.	CARPET	RESIL.	4"	CONC. BLK	PAINT	2x4 ACOUST. LAY-IN	STD	8'-8"	
TRAIN/DAY RM	CONC.	V.A.T.	RESIL.	4"	CONC. BLK.	PAINT	2x4 ACOUST. LAY-IN	STD.	8'-8"	
WOMEN	CONC.	CER. TILE	CER. TILE	STD	CONC. BLK	CER. TILE	EXT. GYP. B'D.	PAINT	8'-8"	
MEN	CONC.	CER. TILE	CER. TILE	STD	CONC. BLK.	CER. TILE	EXT. GYP. B'D.	PAINT	8'-8"	
LOCKERS	CONC.	CER. TILE	CER. TILE	STD	CONC. BLK	CER. TILE	EXT. GYP. B'D.	PAINT	8'-8"	
CORR. No. 2	CONC.	V.A.T.	RESIL.	4"	CONC. BLK.	PAINT	2x4 ACOUST. LAY-IN	STD	8'-8"	
UTILITY	CONC.	STL. TRL. & SEALER	—	—	CONC. BLK	PAINT	DBL. TEES	PAINT	SEE DWGS	
VALVE STOR.	CONC.	BROOM W/ SEALER	—	—	CONC. & CONC. BLK	PAINT	CONC.	PAINT	SEE DWGS.	
POLYMER STOR	CONC.	P.T.	P.T.	6"	CONC.	PAINT	EXPOSED	STRUCT., SEALED & PAINTED		
POLYMER MIX	CONC.	P.T.	P.T.	6"	CONC.	PAINT	EXPOSED	STRUCT., SEALED & PAINTED		
PRESSURE VSLS	CONC.	P.T.	P.T.	6"	CONC. & CONC. BLK.	PAINT	EXPOSED	STRUCT., SEALED & PAINTED		
THICKENER TANKS	CONC.	BROOM W/ SEALER	—	—	CONC. & CONC. BLK	PAINT	EXPOSED	STRUCT., SEALED & PAINTED		
PUMPS	CONC.	BROOM W/ SEALER	—	—	CONC. & CONC. BLK.	PAINT	EXPOSED	STRUCT., SEALED & PAINTED		
BELT PRESSES	CONC.	P.T.	P.T.	6"	CONC. & CONC. BLK	PAINT	EXPOSED	STRUCT. - SEALED & PAINTED		
U.L. THICKENERS	CONC.	P.T.	P.T.	6"	CONC. & CONC. BLK.	PAINT	EXPOSED	STRUCT. - SEALED & PAINTED		

LINTEL SCHEDULE (8" MIN. BEARING EA. END)

OPG. WIDTH	4"MASONRY	6"MASONRY	8"MASONRY	10"MASONRY	12"MASONRY	STL-4"WALL	STL-8"WALL	STL-12"WALL
0-0 TO 2-0	3-5/8X7-5/8 W/1N3 T&B	5-5/8X7-5/8 W/1N3 T&B	7-5/8X7-5/8 W/2N3 T&B	9-5/8X7-5/8 W/2N3 T&B	11-5/8X7-5/8 W/3N3 T&B	PL-5/16X3-1/2	PL-5/16X7-1/2	PL-5/16X11-1/2
2-0 TO 3-6	3-5/8X7-5/8 W/1N3 T&B	5-5/8X7-5/8 W/1N3 T&B	7-5/8X7-5/8 W/2N3 T&B	9-5/8X7-5/8 W/2N3 T&B	11-5/8X7-5/8 W/3N3 T&B	L 2-1/2X3-1/2X1/4	2L'S 2-1/2X3-1/2X1/4	3L'S 2-1/2X3-1/2X1/4
3-6 TO 5-0	3-5/8X7-5/8 W/1N4 T&B	5-5/8X7-5/8 W/1N4 T&B	7-5/8X7-5/8 W/2N3 T&B	9-5/8X7-5/8 W/2N4 T&B	11-5/8X7-5/8 W/3N3 T&B	L 2-1/2X3-1/2X1/4	2L'S 2-1/2X3-1/2X1/4	3L'S 2-1/2X3-1/2X1/4
5-0 TO 6-6	3-5/8X7-5/8 W/1N5 T&B	5-5/8X7-5/8 W/2N4 T&B	7-5/8X7-5/8 W/2N3 T&B	9-5/8X7-5/8 W/2N5 T&B	11-5/8X7-5/8 W/3N4 T&B	L 3X3-1/2X1/4	2L'S 3X3-1/2X1/4	3L'S 3X3-1/2X1/4
6-0 TO 8-0	3-5/8X7-5/8 W/1N6 T&B	5-5/8X7-5/8 W/2N5 T&B	7-5/8X7-5/8 W/2N6 T&B	9-5/8X7-5/8 W/2N6 T&B	11-5/8X7-5/8 W/3N6 T&B	L 4X3-1/2X1/4	2L'S 4X3-1/2X1/4	3L'S 4X3-1/2X1/4
8-0 TO 10-0	3-5/8X7-5/8 W/1N5 T&B	5-5/8X7-5/8 W/2N4 T&B	7-5/8X7-5/8 W/2N5 T&B	9-5/8X7-5/8 W/2N6 T&B	11-5/8X7-5/8 W/3N5 T&B	L 5X3-1/2X1/4	2L'S 5X3-1/2X1/4	3L'S 5X3-1/2X1/4

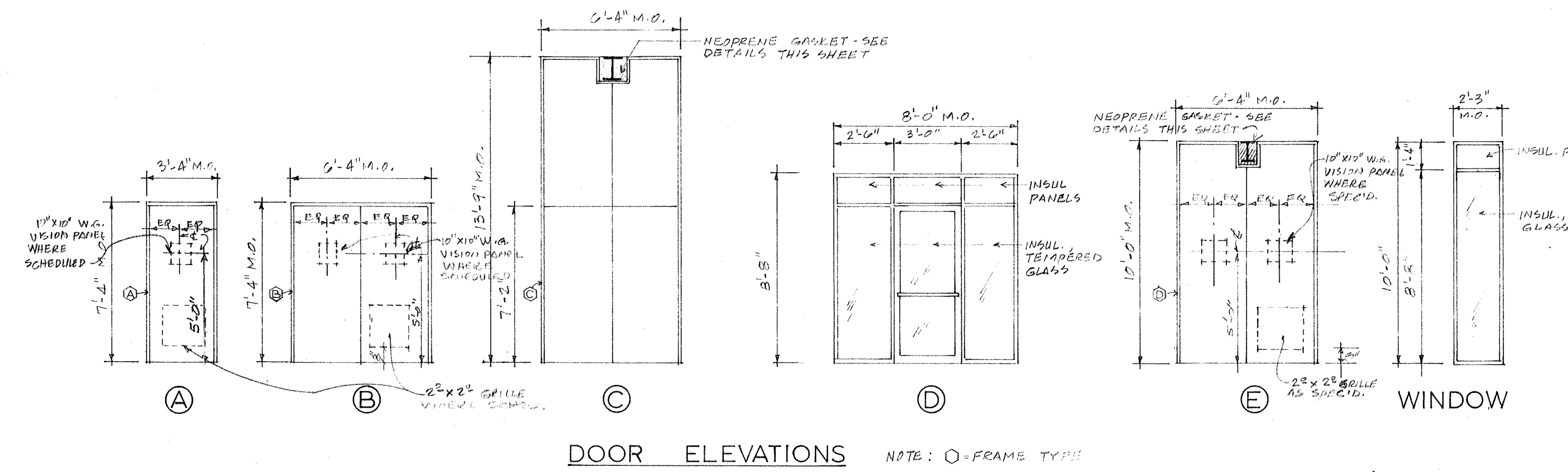

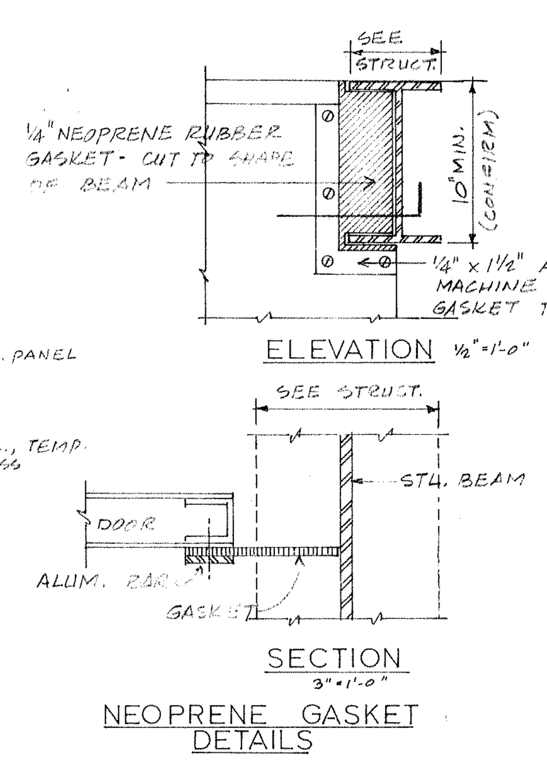

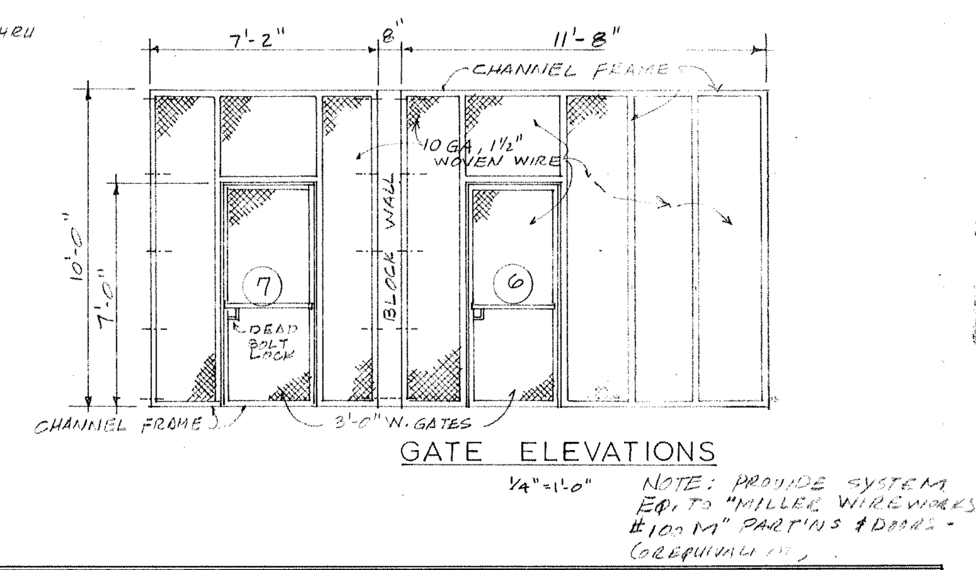

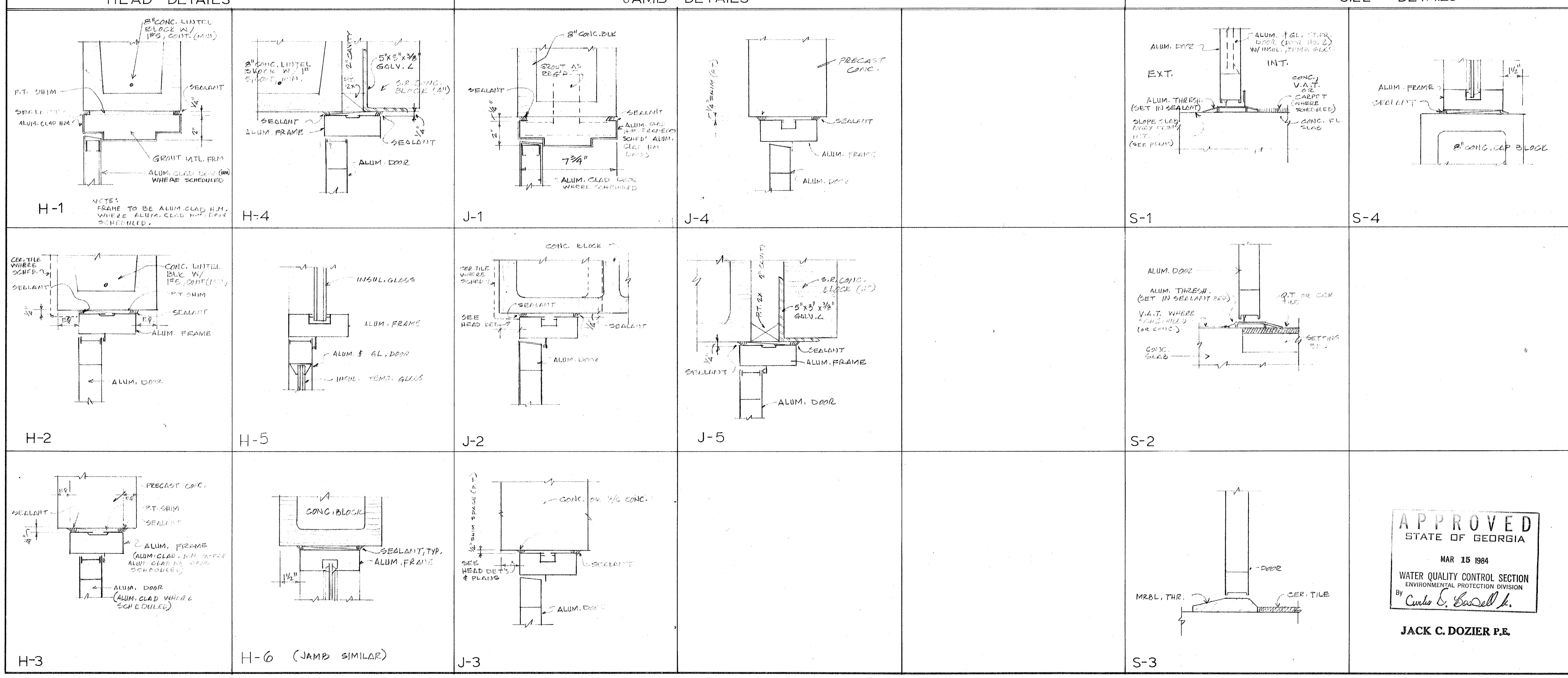

HARDWARE SCHEDULE

HEADING NO. HW-1

DOORS NO. 2 AL X AL//EACH DOOR TO HAVE:

- 1 1/2 PAIR HINGES BB4101-32D X NRP
- 1 DEADLOCK ADAMS RITE 1850A
- 1 CYLINDER 20-001
- 1 PULL SET 482 X D X E
- 1 CLOSER 4110HCUSH X BSS X CSS
- 1 THRESHOLD 426 X SIA
- 1 DOOR BOTTOM SEAL 200N

HEADING HW-2

DOORS NO. 20,23,24, AL X AL//EACH DOOR TO HAVE:

- 1 1/2 PAIR HINGES BB4101-32D NRP
- 1 LOCKSET C70PD
- 1 CLOSER 4110HCUSH X BSS X CSS
- 1 THRESHOLD 426 X SIA
- 1 DOOR BOTTOM SEAL 202N

HEADING HW-3

DOORS NO. 17 AL X AL//EACH PAIR TO HAVE:

- 6 PAIR HINGES BB5151-32D
- 2 SURFACE BOLTS GJ1600 X 1 @ 8" & 1 @ 20" (TO SECURE INACTIVE LEAF)
- 2 SURFACE BOLTS GJ1600 X 72" (TO SECURE TOP LEAVES)
- 1 SURFACE BOLT GJ1600 X 20" (TO SECURE ACTIVE LEAF TO TOP)
- 1 LOCKSET C70PD
- 2 CLOSER 4110 CUSH X FPA
- 2 OVERHEAD HOLDER GJ81MHD @ TOP LEAVES
- 1 THRESHOLD 324 X 324 X WELD X BLOCK X SIA
- 1 DOOR BOTTOM SEAL 202N
- 2 ASTRAGAL 125 NG

HEADING HW-4

DOORS NO. 16 AL X AL//EACH PAIR TO HAVE:

- 3 PAIR HINGES BB5151-32D
- 2 FLUSHBOLTS 1357
- 1 LOCKSET C70PD
- 2 CLOSER 4110HCUSH X BSS X CSS
- 1 THRESHOLD 324 X 324 X WELD X BLOCK X SIA
- 1 DOOR BOTTOM SEAL 202N
- 1 ASTRAGAL 125NG

HEADING HW-5

DOORS NO. 18 AL X AL//EACH PAIR TO HAVE:

- 3 PAIR HINGES BB5151-32D X NRP
- 2 FLUSHBOLTS 1357
- 1 LOCKSET C70PD
- 2 CLOSER 4110HCUSH X CSS X BSS
- 1 THRESHOLD 324 X 324 X WELD X BLOCK X SIA
- 1 DOOR BOTTOM SEAL 202N
- 1 ASTRAGAL 125NG

HEADING HW-6

DOORS NO. 1, 19 AL CLAD MD X MF "B"//EACH DOOR TO HAVE:

- 1 1/2 PAIR HINGES BB4101-32D
- 1 PASSAGE SET C10S
- 1 CLOSER 4010
- 1 WALL BUMPER W307-TB

HEADING HW-7

DOORS NO. 3,4,5,8,9,13,14, AL X AL//EACH DOOR TO HAVE:

- 1 1/2 PAIR HINGES BB4101-32D
- 1 LOCKSET C70PD
- 1 CLOSER 4110HCUSH BSS X CSS
- 1 THRESHOLD 426 X SIA (ONIT @ 3)

HEADING HW-8

DOORS NO. 10, 12, AL X AL//EACH DOOR TO HAVE:

- 1 1/2 PAIR HINGES BB4101-32D
- 1 PUSH 40-BX16
- 1 PULL 161-10
- 1 CLOSER 4030 X 180 SWING
- 1 WALL BUMPER W307-TB

HEADING HW-9

DOORS NO. 11, 15 AL X AL//EACH DOOR TO HAVE:

- 1 1/2 PAIR HINGES BB4101-32D
- 1 PASSAGE SET C10S
- 1 CLOSER 4010
- 1 WALL BUMPER W307-TB
- 1 THRESHOLD 426 X SIA (@15)

HEADING HW-10

DOORS NO. 21, 22 AL X AL//EACH DOOR TO HAVE:

- 3 PAIR HINGES BB5151-32D
- 2 FLUSHBOLTS 1357
- 1 LOCKSET C70PD
- 2 CLOSER 4110HCUSH X CSS X BSS

HEADING HW-11

DOORS NO. 25 AL CLAD MD X MF "B"//EACH DOOR TO HAVE:

- 1 1/2 PAIR HINGES BB4101-32D
- 1 LOCKSET C70PD
- 1 CLOSER 4110CUSH BSS X CSS

HEADING HW-12

DOORS NO. 26, 27 AL X AL//EACH DOOR TO HAVE:

- 1 1/2 PAIR HINGES BB4101-32D
- 1 PASSAGE SET C10S
- 1 CLOSER 4110HCUSH X CSS X BSS

HEADING HW-13

DOORS NO. 28 AL CLAD MD X MF "B"//EACH DOOR TO HAVE:

- 1 1/2 PAIR HINGES BB4101-32 X NRP
- 1 LOCKSET C70PD
- 1 CLOSER 4110CUSH
- 1 SET WEATHERSTRIP FS120A
- 1 DOOR BOTTOM SEAL FS102A

HEADING HW-14

DOORS NO. "ROLL-UP"//EACH DOOR TO HAVE:

- 1 PADLOCK 45-122-32D

HEADING HW-15

DOORS NO. 6, 7, &8//EACH DOOR TO HAVE:

- 1 CYLINDER AS REQUIRED

HEADING HW-16 (MISC)

- 1 KEY SYSTEM SMTC-RMC-505

END OF HARDWARE SECTION

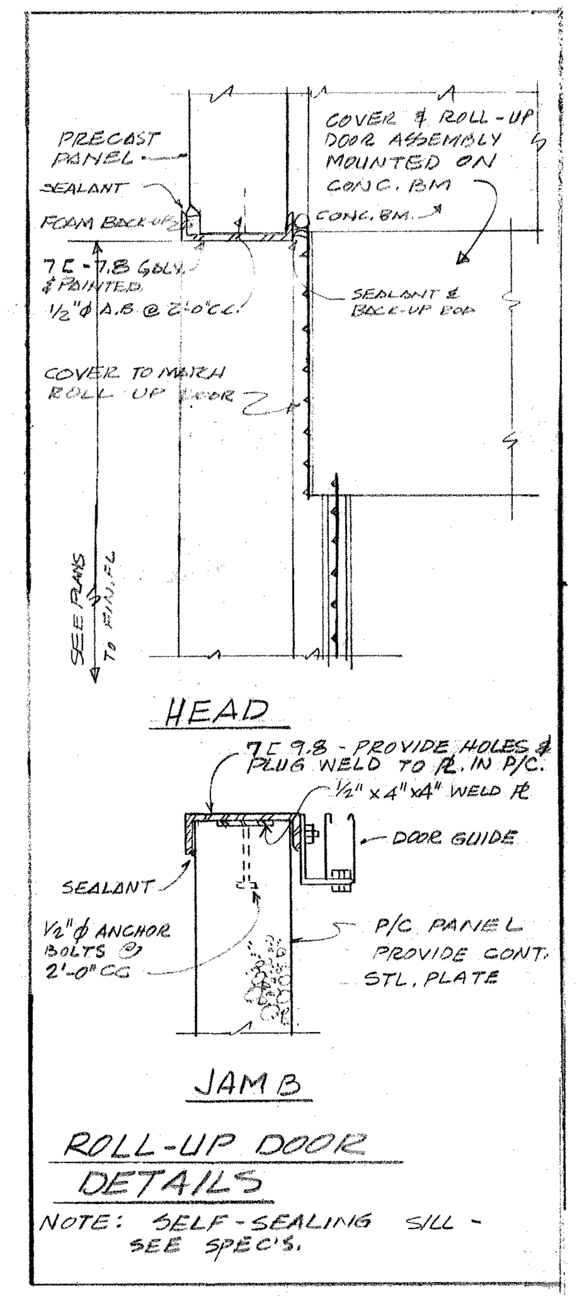

APPROVED
STATE OF GEORGIA
MAR 15 1984
WATER QUALITY CONTROL SECTION
ENVIRONMENTAL PROTECTION DIVISION
By Curtis S. Bissell Jr.

JACK C. DOZIER P.E.

GEORGIA REGISTERED PROFESSIONAL ENGINEER No. 5021 JOHN H. WIEDEMAN

EPA PROJECT NO. C130409

CITY OF BRUNSWICK, GEORGIA
SEWERAGE SYSTEM IMPROVEMENTS

ACADEMY CREEK PLANT

DOOR & FINISH SCHEDULES

SCALE AS NOTED	WIEDEMAN AND SINGLETON ENGINEERS	SHEET
DATE JAN., 1984	ATLANTA GEORGIA	39 OF 39

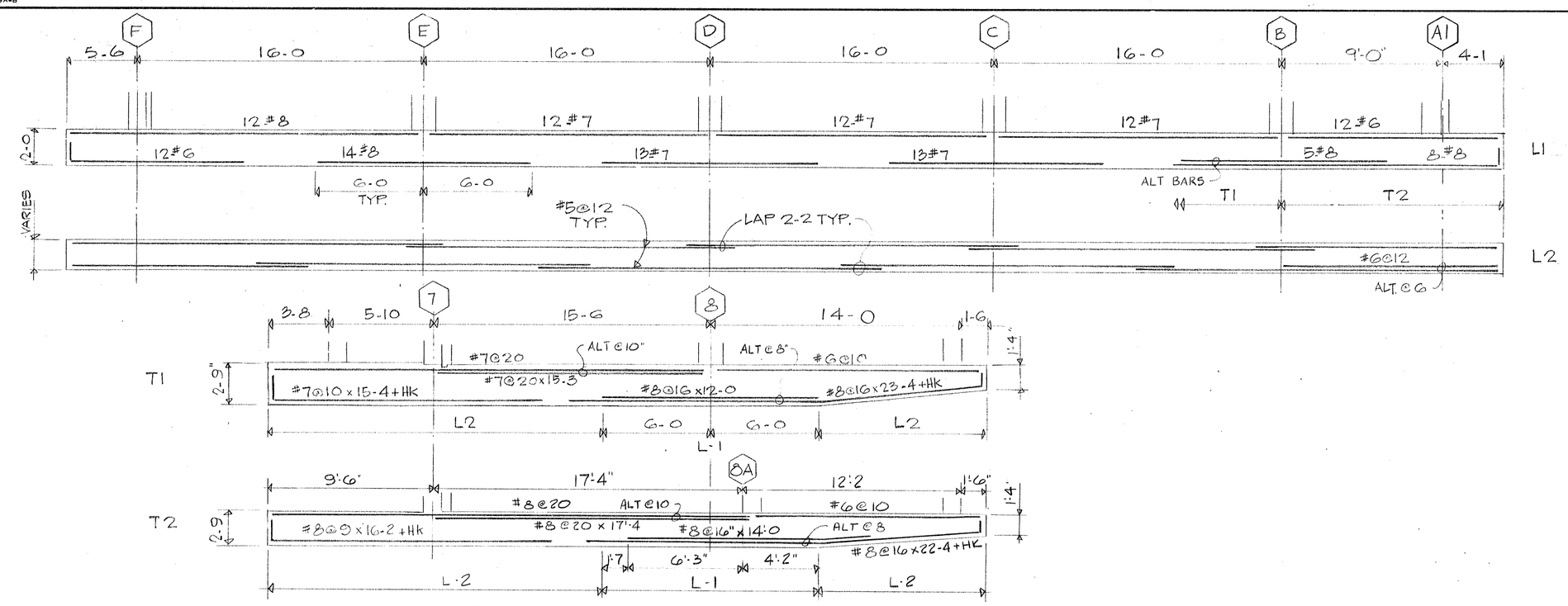

LOWER LEVEL MAT REINF.

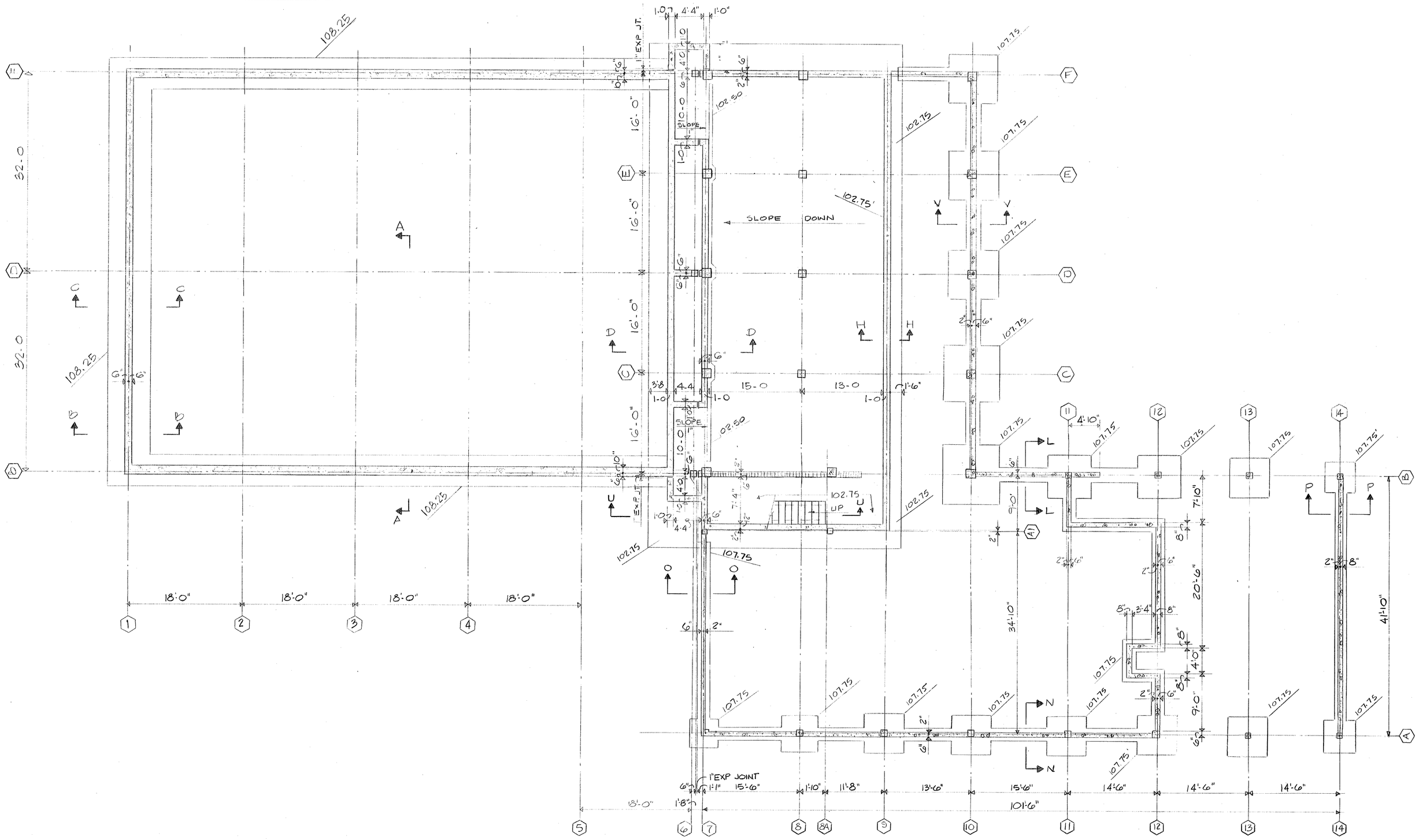

LOWER LEVEL AND FOUNDATION PLAN
1/8"=1'-0"

APPROVED
STATE OF GEORGIA
MAR 15 1984
WATER QUALITY CONTROL SECTION
ENVIRONMENTAL PROTECTION DIVISION
By Carlos E. Bassell Jr.

JACK C. DOZIER P.E.

EPA PROJECT NO. C130409

CITY OF BRUNSWICK, GA.

SEWERAGE SYSTEM IMPROVEMENTS

ACADEMY CREEK PLANT

DEWATERING / MAINTENANCE BUILDING
LOWER LEVEL AND FOUNDATION PLAN

SCALE AS SHOWN DATE JAN. 84	WIEDEMAN AND SINGLETON ENGINEERS ATLANTA GEORGIA	SHEET S-1 OF 11

C. J. Weeman

AF 10479A-B

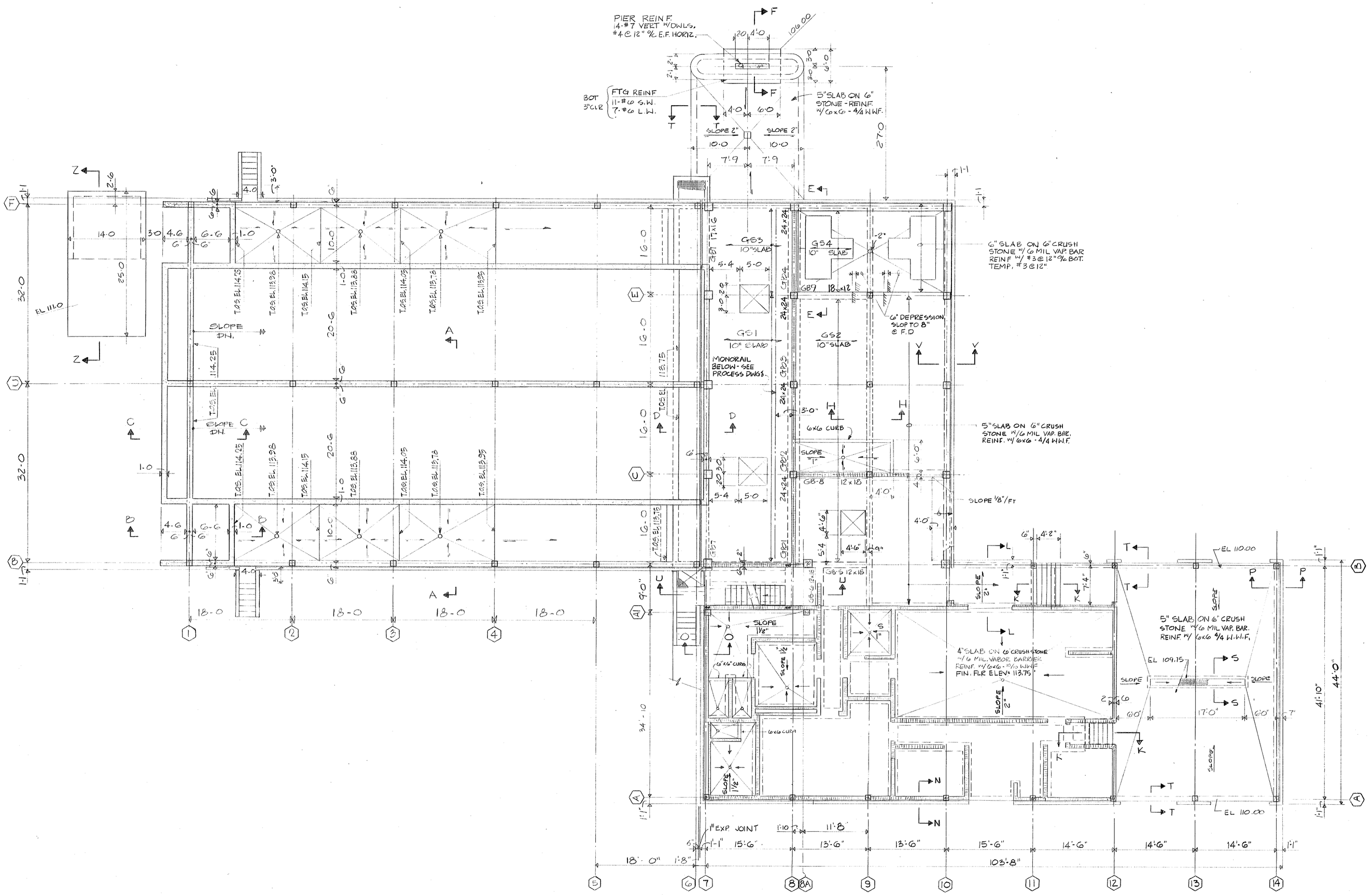

GROUND FLOOR & FOUNDATION PLAN
1/8" = 1'-0"

APPROVED
STATE OF GEORGIA
MAR 15 1984
WATER QUALITY CONTROL SECTION
ENVIRONMENTAL PROTECTION DIVISION
By Curtis L. Bardell Jr.

JACK C. DOZIER P.E.

EPA PROJECT NO. C130409

CITY OF BRUNSWICK, GA.
SEWERAGE SYSTEM IMPROVEMENTS
ACADEMY CREEK PLANT
DEWATERING / MAINTENANCE BUILDING
GROUND FLOOR AND FDN. PLAN

SCALE	WIEDEMAN AND SINGLETON ENGINEERS	SHEET
AS SHOWN		S-2
DATE	ATLANTA GEORGIA	OF 11
JAN 84		

125

AF 10479A+B

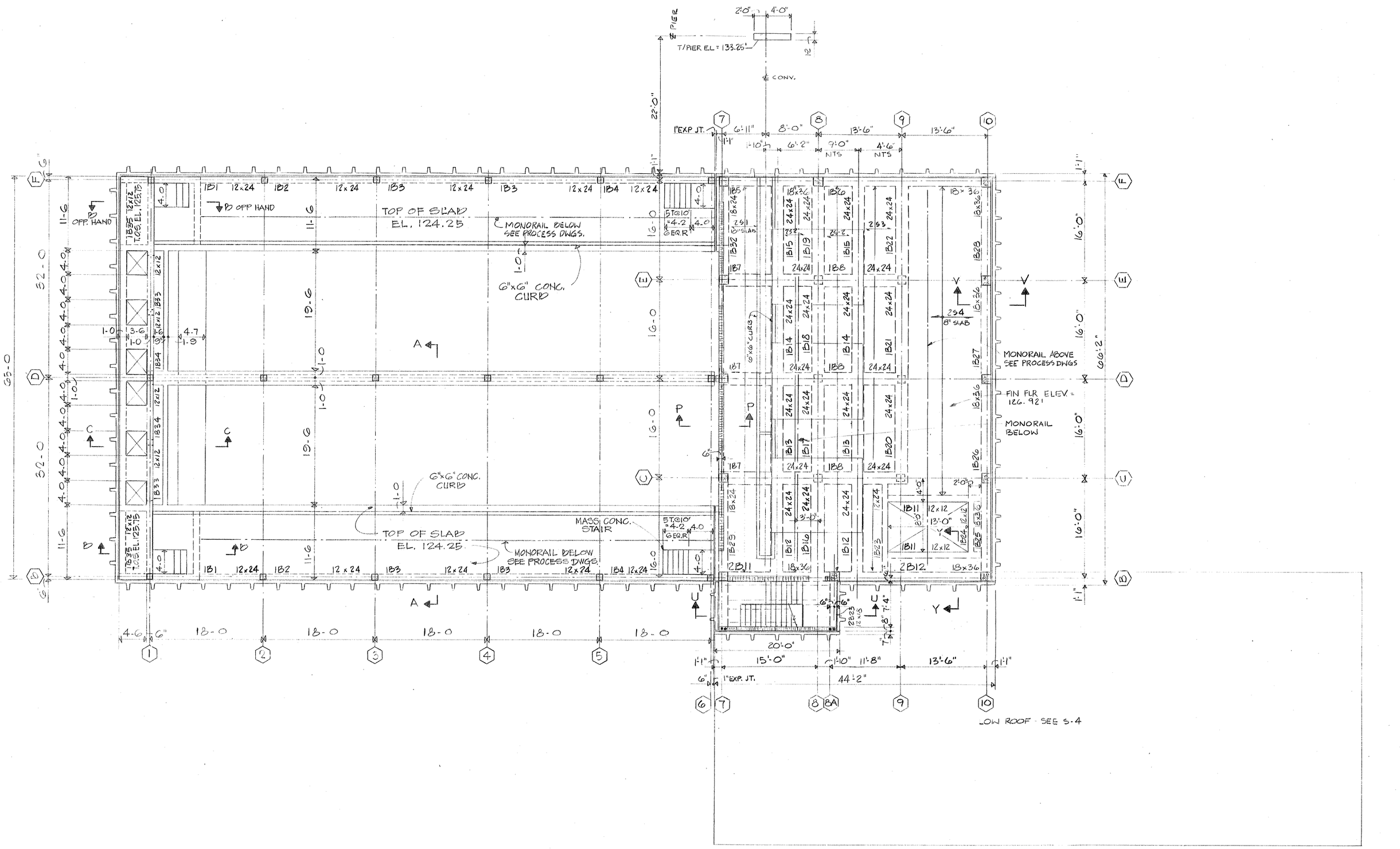

SECOND FLOOR FRAMING PLAN

1/8"=1'-0"

APPROVED
STATE OF GEORGIA
MAR 15 1984
WATER QUALITY CONTROL SECTION
ENVIRONMENTAL PROTECTION DIVISION
By Curtis E. Bardell Jr.

JACK C. DOZIER P.E.

EPA PROJECT NO. C130409

CITY OF BRUNSWICK, GA.

SEWERAGE SYSTEM IMPROVEMENTS

ACADEMY CREEK PLANT

DEWATERING / MAINTENANCE BUILDING

SECOND FLOOR FRAMING PLAN

SCALE	WIEDEMAN AND SINGLETON ENGINEERS	SHEET
1/8"=1'-0"		S-3
DATE JAN 84	ATLANTA GEORGIA	OF 11

AF 10479A-B

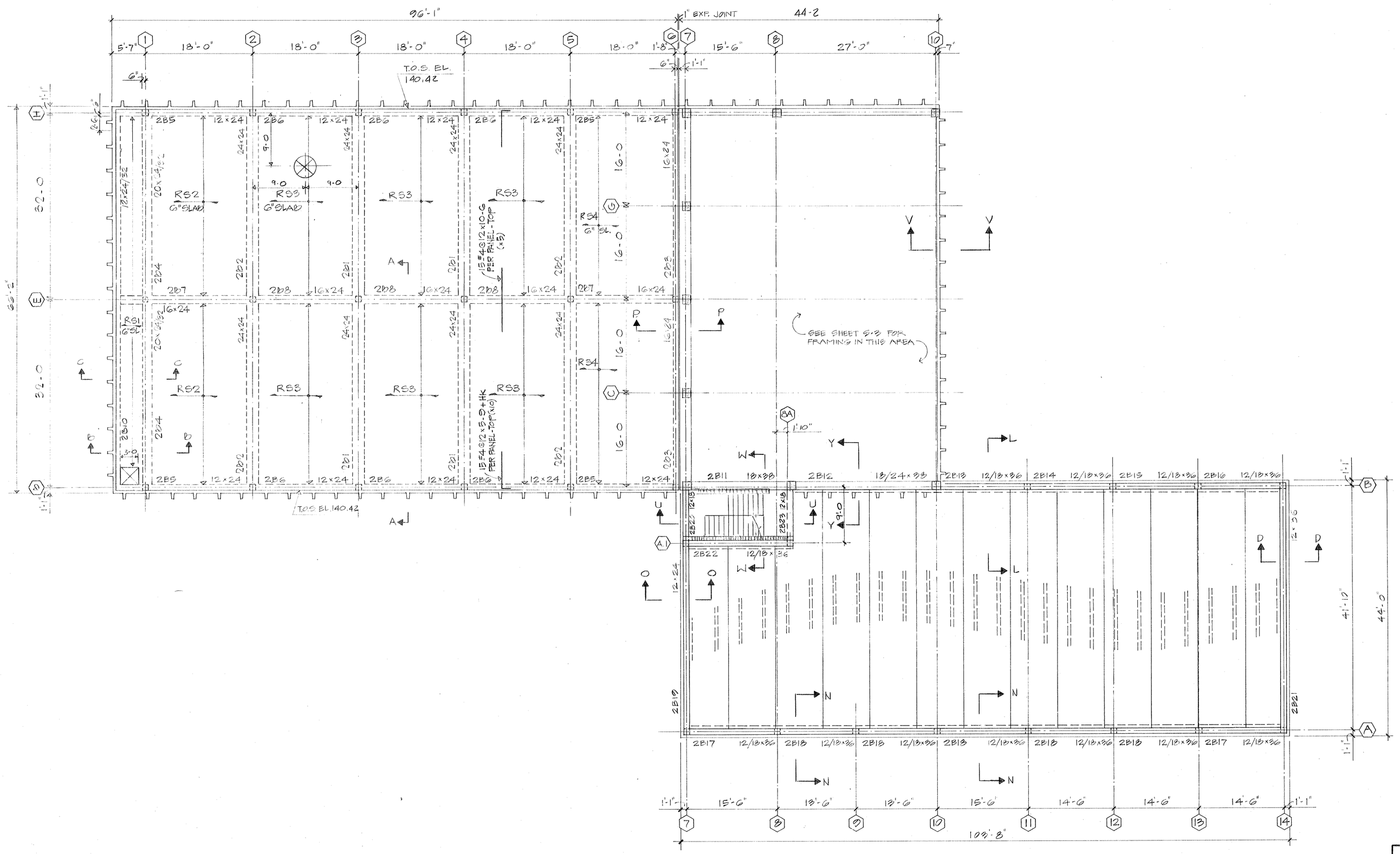

LOW ROOF FRAMING PLAN

1/8"=1'-0"

APPROVED
STATE OF GEORGIA
MAR 15 1984
WATER QUALITY CONTROL SECTION
ENVIRONMENTAL PROTECTION DIVISION
By Curtis E. Bedell Jr.
JACK C. DOZIER P.E.

EPA PROJECT NO. C130409

CITY OF BRUNSWICK, GA.

SEWERAGE SYSTEM IMPROVEMENTS

ACADEMY CREEK PLANT

DEWATERING / MAINTENANCE BUILDING

LOW ROOF FRAMING PLAN

SCALE	WIEDEMAN AND SINGLETON ENGINEERS	SHEET
1/8"= 1'-0"		S-4
DATE	ATLANTA GEORGIA	OF 11
JAN 84		

AF 10479A+B

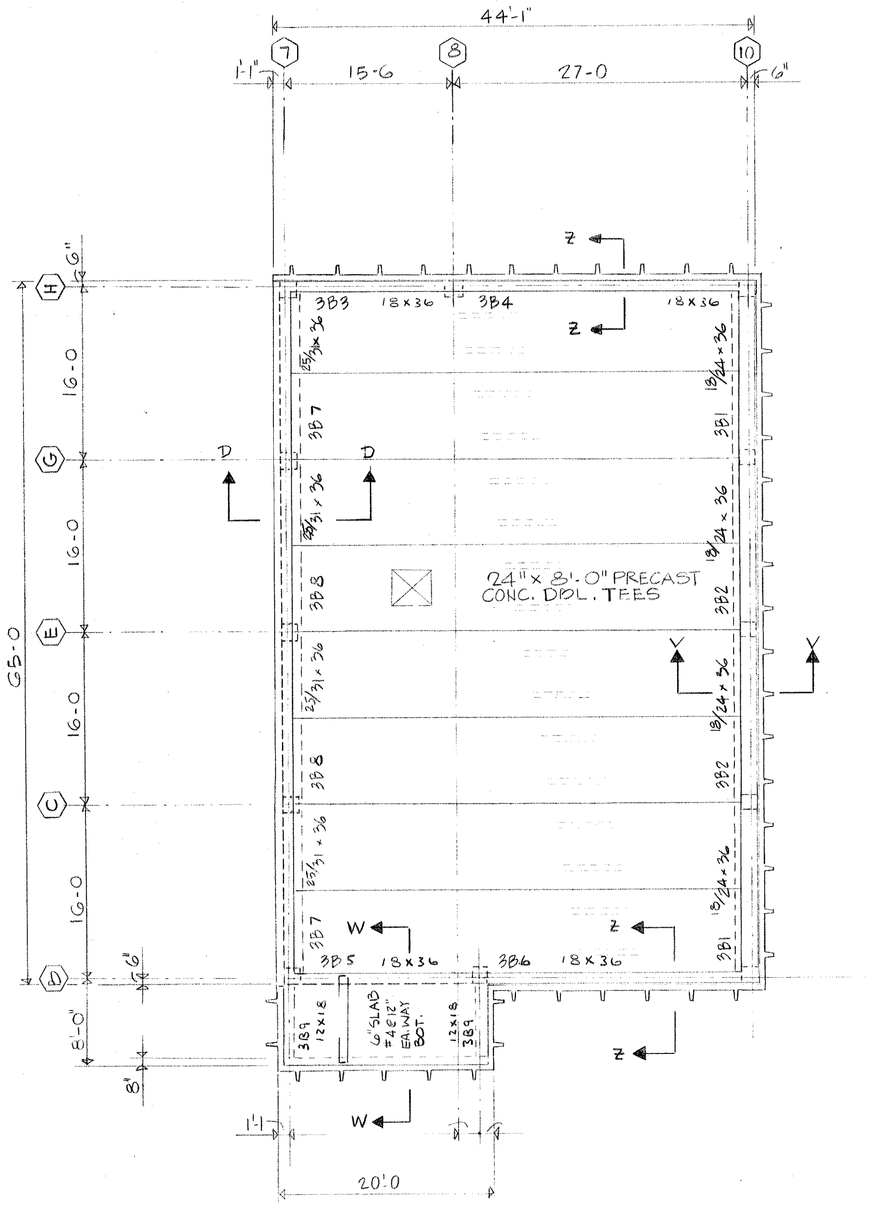

HIGH ROOF FRAMING PLAN

1/8" = 1'-0"

APPROVED
STATE OF GEORGIA
MAR 15 1984
WATER QUALITY CONTROL SECTION
ENVIRONMENTAL PROTECTION DIVISION
By Curtis E. Bardell Jr.

JACK C. DOZIER P.E.

EPA PROJECT NO. C130409

CITY OF BRUNSWICK, GA.
SEWERAGE SYSTEM IMPROVEMENTS
ACADEMY CREEK PLANT
DEWATERING / MAINTENANCE BUILDING

SCALE	WIEDEMAN AND SINGLETON ENGINEERS	SHEET
AS SHOWN	ATLANTA GEORGIA	S-5
DATE JAN. 84		OF 11

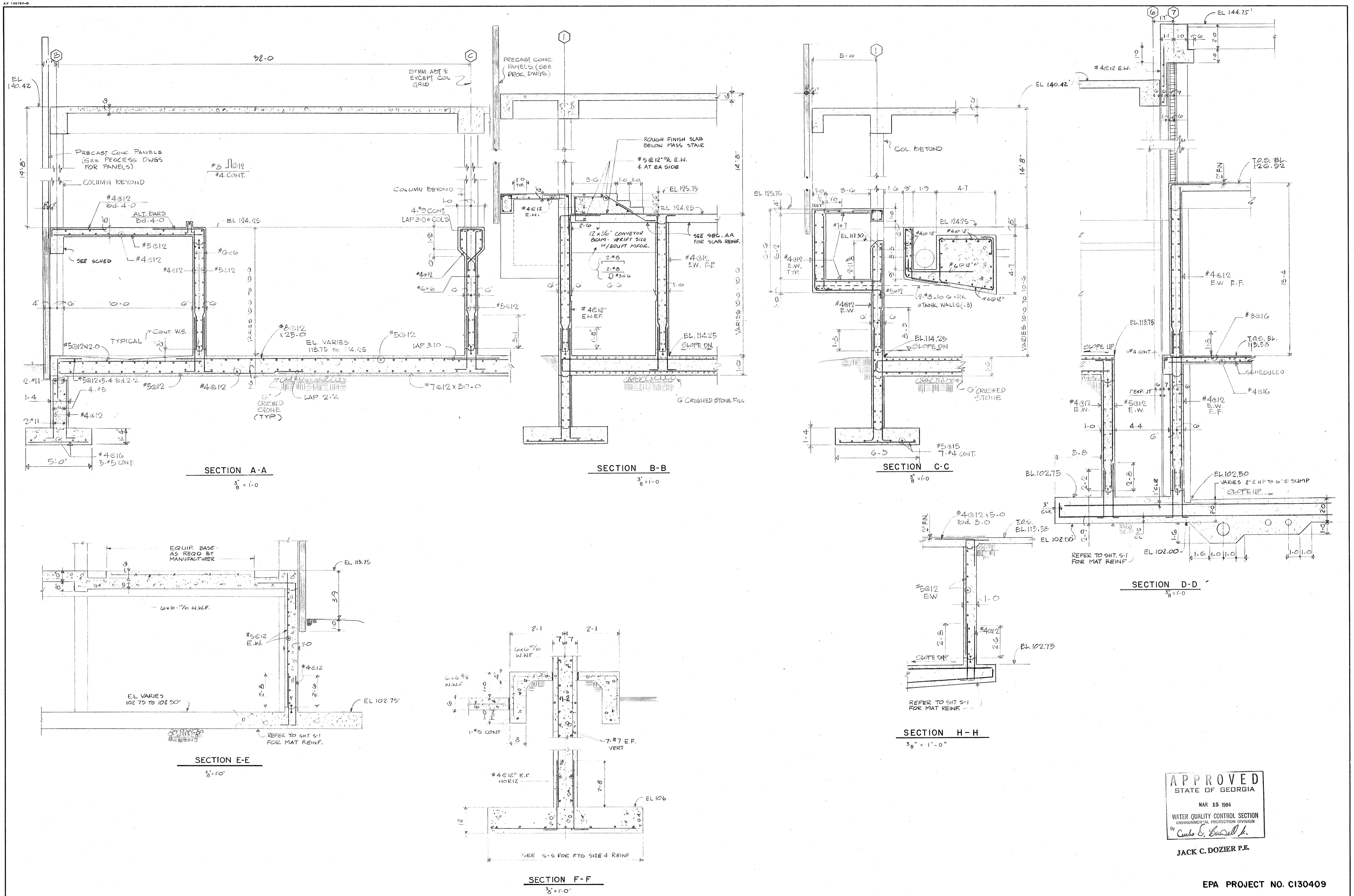

APPROVED
STATE OF GEORGIA
MAR 15 1984
WATER QUALITY CONTROL SECTION
ENVIRONMENTAL PROTECTION DIVISION
By Curtis G. Boswell Jr.

JACK C. DOZIER P.E.

EPA PROJECT NO. C130409

CITY OF BRUNSWICK, GA.	
SEWERAGE SYSTEM IMPROVEMENTS	
ACADEMY CREEK PLANT	
DEWATERING/MAINTENANCE BUILDING SECTIONS	
SCALE AS SHOWN DATE JAN 84	WIEDEMAN AND SINGLETON ENGINEERS ATLANTA GEORGIA
SHEET S-6 OF 11	

BEAM SCHEDULE

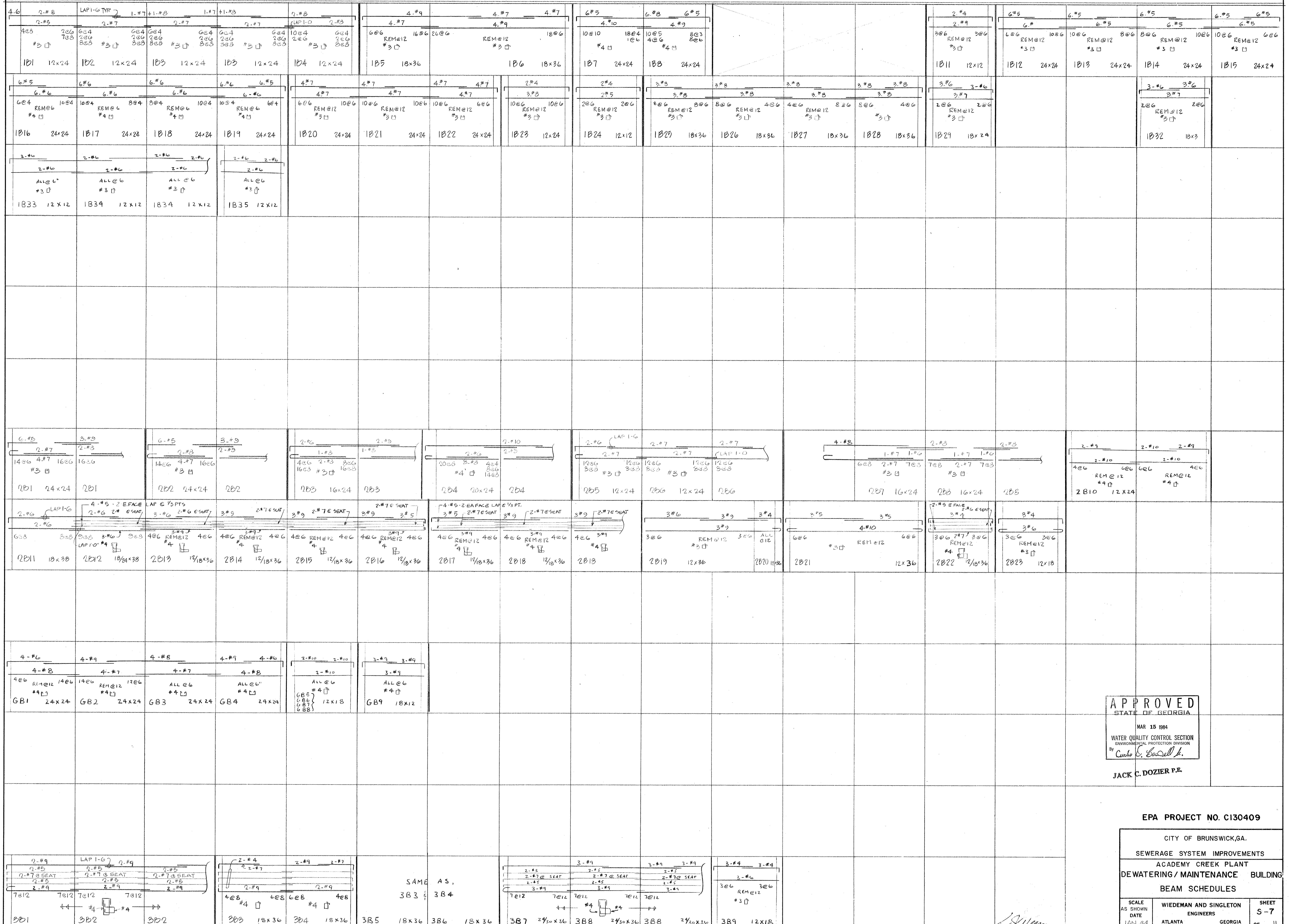

APPROVED
STATE OF GEORGIA
MAR 15 1984
WATER QUALITY CONTROL SECTION
ENVIRONMENTAL PROTECTION DIVISION
By [signature]

JACK C. DOZIER P.E.

EPA PROJECT NO. C130409

CITY OF BRUNSWICK,GA.
SEWERAGE SYSTEM IMPROVEMENTS
ACADEMY CREEK PLANT
DEWATERING/MAINTENANCE BUILDING
BEAM SCHEDULES

SCALE AS SHOWN	WIEDEMAN AND SINGLETON ENGINEERS	SHEET S-7
DATE JAN 84.	ATLANTA GEORGIA	OF 11

AF 10679A-B

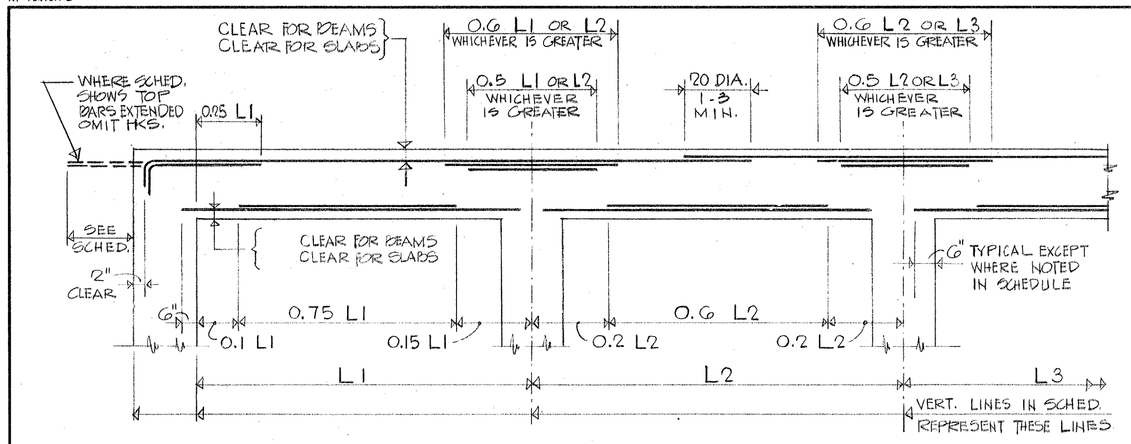

BEAM & SLAB ELEVATION

- THIS DIAGRAM SHALL APPLY UNLESS SHOWN OTHERWISE ON SCHEDULE.
- SEE SCHEDULE FOR SIZE AND QUANTITIES OF BARS USED.
- TOP AND BOTTOM STEEL IS IN ONE LAYER RESPECTIVELY UNLESS OTHERWISE NOTED IN SCHEDULE. STEEL IS SHOWN SEPARATED ON THIS DIAGRAM AND IN SCHEDULES FOR CLARITY. CENTER TOP REINFORCING OVER SUPPORT UNLESS OTHERWISE SHOWN ON SCHEDULE.
- TOP CONTINUOUS STEEL LAPS TYPICALLY AT MIDSPAN AS SHOWN. IT MAY ALSO LAP OVER THE SUPPORT BY 0.6D OF THE GREATER ADJACENT SPAN, IF SHOWN BY THE SCHEDULES.
- WHERE HKS (HOOKS) ARE SHOWN ON SCHEDULE THEY ARE TO BE PROVIDED REGARDLESS OF THE REQUIREMENTS OF THIS DIAGRAM.
- STIRRUP SPACING BEGINS AT FACE OF OF SUPPORT.
- EXTEND TOP BARS TO SUPPORT STIRRUPS WHERE STIRRUPS ARE OTHERWISE UNSUPPORTED.

TYPICAL REINFORCING DETAILS — CONCRETE BEAMS & CONCRETE SLABS

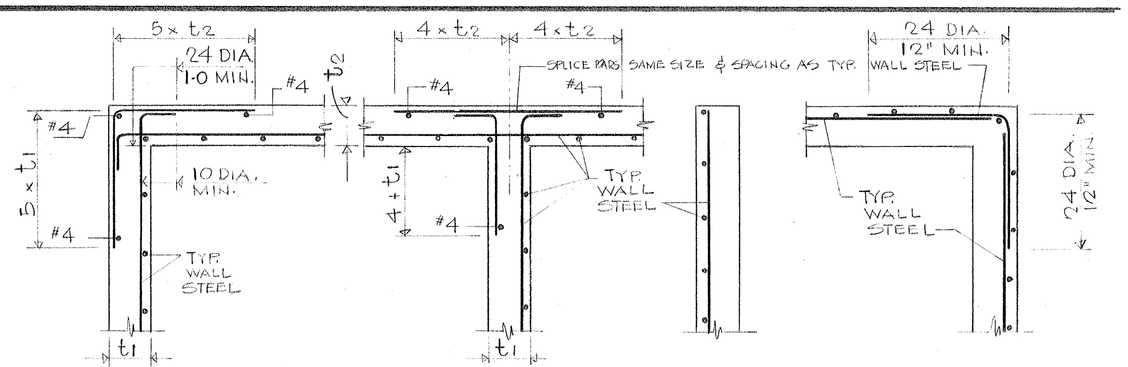

BARS IN ONE FACE

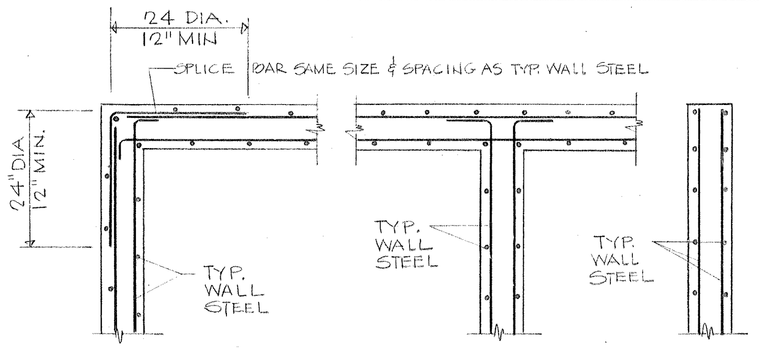

BARS IN BOTH FACES

ARRANGEMENT OF STEEL AT WALL CORNERS, ENDS & INTERSECTIONS

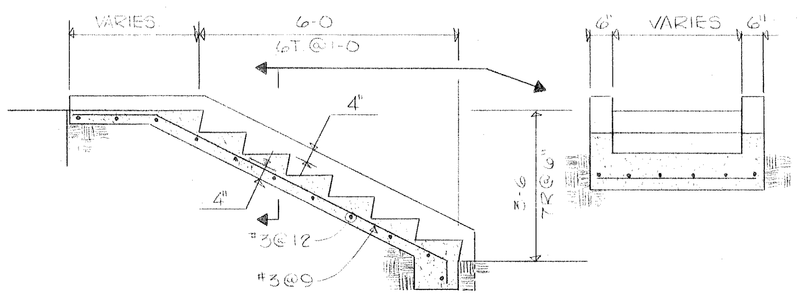

TYPICAL STAIR DETAILS @ BERM

1/2" = 1'-0"

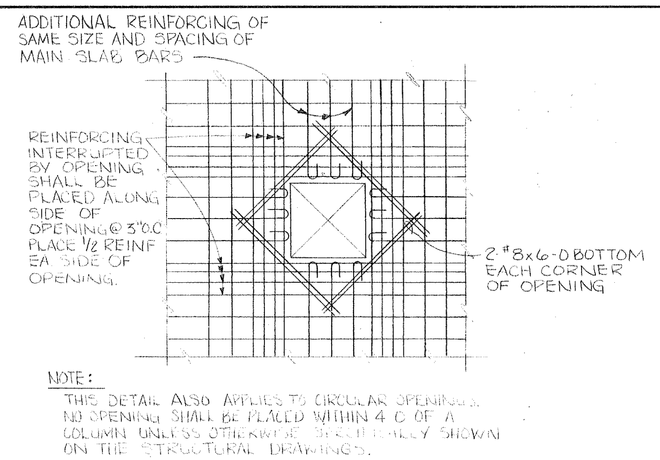

NOTE:
THIS DETAIL ALSO APPLIES TO CIRCULAR OPENINGS. NO OPENING SHALL BE PLACED WITHIN 4 D OF A COLUMN UNLESS OTHERWISE SPECIFICALLY SHOWN ON THE STRUCTURAL DRAWINGS.

TYPICAL REINFORCING AROUND SLAB OPENINGS - TWO WAY SLABS

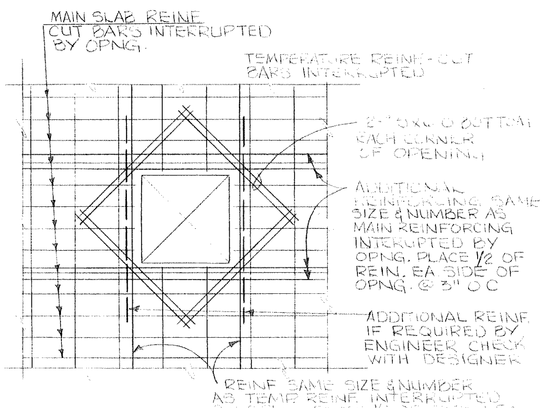

NOTE:
THIS DETAIL ALSO APPLIES TO CIRCULAR OPENINGS.

TYPICAL REINFORCING AROUND OPENINGS IN ONE-WAY SLABS

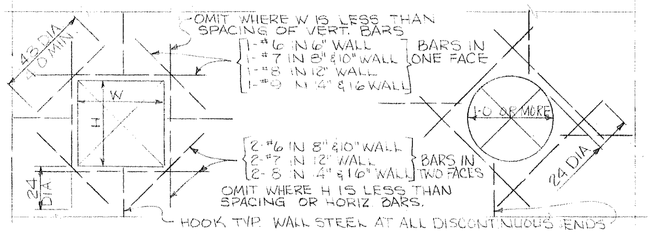

REINFORCEMENT AROUND OPENINGS IN CONCRETE WALLS

BAR SIZE	TABLE 1	TABLE 2	TABLE 3 f'c = 4,000	TABLE 3 f'c = 5,000
#5	12"	19"	26"	46"
#6	14"	23"	31"	51"
#7	17"	26"	29"	26"
#8	18"	30"	51"	46"
#9	22"	34"	65"	58"
#10	24"	38"	54"	72"
#11	27"	42"	101"	90"

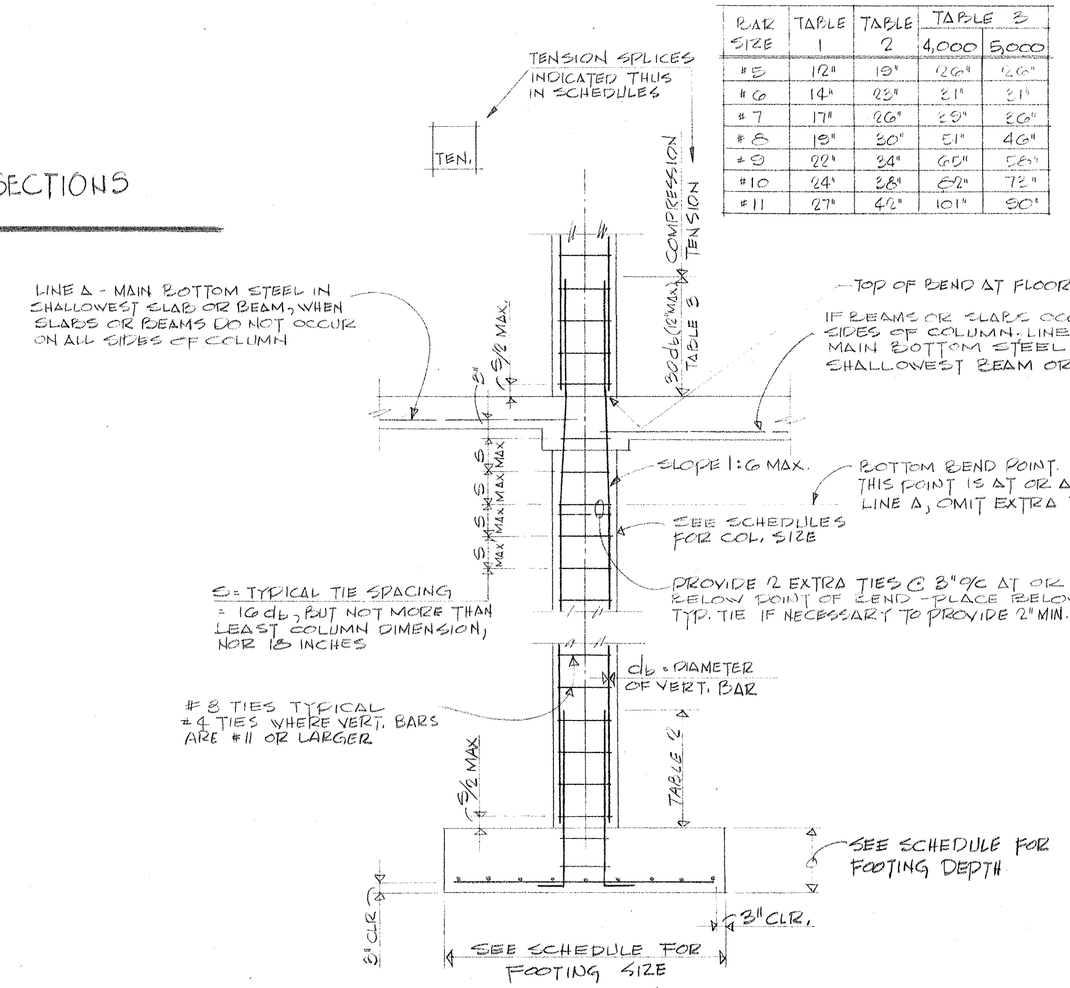

TYPICAL COLUMN & FOOTING DETAIL

COLUMN & FOOTING SCHEDULE

COLUMN NUMBER		7	8	9	A 10	A 11	A 12	A 13	A 14	A-1 7	A-1 8	B 11	B 12	B 13	B 14		
ROOF	SIZE	12x12	12x12	12x12	12x12	12x12	12x12	12x12	12x12	12x12	12x12	12x12	12x12	12x12	12x12		
	VERT. STEEL	4-#6	4-#6	4-#6	4-#6	4-#6	4-#6	4-#6	4-#6	4-#6	4-#6	4-#6	4-#6	4-#6	4-#6		
GROUND FLR	SIZE	12x12	12x12	12x12	12x12	12x12	12x12	12x12	12x12	12x12	12x12	12x12	12x12	12x12	12x12		
	VERT. STEEL	4-#6	4-#6	4-#6	4-#6	4-#6	4-#6	4-#6	4-#6	4-#6	4-#6	4-#6	4-#6	4-#6	4-#6		
FDN.	SIZE	5'-9 x 5'-9 x 1'-0	6'-6" x 6'-6 x 1'-1"	6'-6 x 6'-6 x 1'-1	7'-0 x 7'-0 x 1'-2	7'-0 x 7'-0 x 1'-2	7'-0 x 7'-0 x 1'-2	7'-0 x 7'-0 x 1'-2	7'-0 x 7'-0 x 1'-2	5'-9 x 5'-9 x 1'-0	HOLD	HOLD	7'-3 x 7'-3 x 1'-3	7'-6 7'-6 x 1'-3	7'-0 x 7'-0 x 1'-2	5'-9 x 5'-9 x 1'-0		
FOOTING	REINF. 1/2 E.W.	12-#7	12-#8	14-#7	12-#8	12-#8	12-#8	12-#8	12-#7	HOLD	HOLD	14-#8	14-#8	12-#8	12-#7		

COLUMN & FOOTING SCHEDULE - DEWATERING BUILDING

COLUMN NUMBER		E 7	E SA		E 10	C 7	C 8	C 9	C 10	D 7	D 8	D 9	D 10	E 7	E 8	E 9	E 10
HIGH ROOF	SIZE	18x18	18x18		18x18	18x18			18x18	18x18			18x18	18x18			18x18
	VERT. STEEL	6-#9	6-#9		6-#9	6-#11			6-#11	6-#11			6-#11	6-#11			6-#11
LOW ROOF	SIZE																
	VERT. STEEL	TEN.	TEN.		TEN.	TEN.			TEN.	TEN.			TEN.	TEN.			TEN.
2ND FLOOR	SIZE	18x18	18x18		18x18	18x18	12x12	12x12	16x18	18x18	12x12	12x12	16x18	18x18	12x12	12x12	18x18
	VERT. STEEL	6-#9	6-#9		6-#9	6-#11	4-#7	4-#5	6-#11	6-#11	4-#7	4-#5	6-#11	6-#11	4-#7	4-#5	6-#11
GROUND FLOOR	SIZE	18x18	18x18			18x18	16x16			18x18	16x16			18x18	16x16		
	VERT. STEEL	6-#9	6-#9			6-#11	4-#9			6-#11	4-#9			6-#11	4-#9		
BASEMENT	SIZE	2 BMT. MAT SEE SCHED. SHT. 9-1	2 BMT. MAT SEE SCHED. SHT. 9-1		6'-0 x 6'-0 x 2'-0	2 BMT. MAT SEE SCHED. SHT. 9-1	2 BMT. MAT SEE SCHED. SHT. 9-1	6'-9 x 6'-9 x 1'-10	6'-0 x 10'-0 x 2'-0	2 BMT. MAT SEE SCHED. SHT. 9-1	2 BMT. MAT SEE SCHED. SHT. 9-1	6'-9 x 6'-9 x 1'-10	6'-9 x 6'-9 x 1'-10	2 BMT. MAT SEE SCHED. SHT. 9-1	2 BMT. MAT SEE SCHED. SHT. 9-1	6'-9 x 6'-9 x 1'-10	6'-0 x 11'-3 x 2'-0
FOOTING	REINF. 1/2 E.W.				14-#5			20-#6	10-#6 x 9'-6 11-#6 x 7'-6			20-#6	20-#6			20-#6	10-#6 x 10'-5 14-#6 x 7'-6

COLUMN NUMBER		F 7	F 8	F 9	F 10	B 1	B 2,3,4,5	B 6	F 1	F 2,3,4,5	F 6
HIGH ROOF	SIZE	18x18	18x18	18x18	18x18						
	VERT. STEEL	6-#9	6-#9	6-#9	6-#9						
LOW ROOF	SIZE										
	VERT. STEEL	TEN.	TEN.	TEN.	TEN.	12x12 4-#6	12x12 4-#6	12x12 4-#6	12x12 4-#6	12x12 4-#6	12x12 4-#6
2ND FLOOR	SIZE	18x18	18x18	18x18	18x18	12x12	12x12	12x12	12x12	12x12	12x12
	VERT. STEEL	6-#9	6-#9	6-#9	6-#9	4-#6	4-#6	4-#6	4-#6	4-#6	4-#6
GROUND FLOOR	SIZE	18x18	18x18								
	VERT. STEEL	6-#9	6-#9								
BASEMENT	SIZE	BMT. MAT SEE SCHED. SHT. 9-1	BMT. MAT SEE SCHED. SHT. 9-1	14-0 x 23-0 x 2-0	10-0 x 17-6 x 1'-10	WALL FTG.			WALL FTG.		
FOOTING	REINF. 1/2 E.W.			27-#8 @ 13'-6 16-#10 @ 22'-6	19-#5 @ 17'-0 20-#6 @ 9'-6						

JACK C. DOZIER P.E.
APPROVED
STATE OF GEORGIA
MAR 15 1984
WATER QUALITY CONTROL SECTION
ENVIRONMENTAL PROTECTION DIVISION
By Charles E. Bardell Jr.

GENERAL NOTES

1. THESE NOTES SHALL APPLY EXCEPT WHERE OTHERWISE INDICATED BY THE DRAWINGS OR SPECIFICATIONS, WHERE A DETAIL IS SHOWN FOR ONE CONDITION, IT SHALL APPLY FOR ALL LIKE OR SIMILAR CONDITIONS EVEN THOUGH NOT SPECIFICALLY MARKED ON THE DRAWINGS.
2. BACKFILL AGAINST WALLS SHALL BE DEPOSITED EVENLY AGAINST BOTH SIDES OF THE WALL UNTIL THE LOWER FINAL GRADE IS REACHED.
3. BACKFILL SHALL NOT BE PLACED AGAINST RETAINING WALLS DEPENDENT UPON TOP & BOTTOM SLABS FOR SUPPORT UNTIL SUCH SLABS HAVE BEEN IN PLACE A MINIMUM OF THREE DAYS: EXCEPT FOUNDATION WALLS WITH SLAB ON GROUND AT TOP OF WALL.
4. SEE ARCHITECTURAL, PROCESS, MECHANICAL & ELECTRICAL DRAWINGS FOR DRIPS, CHAMFERS, REGLETS, RUSTICATIONS, SLOTS SLEEVES, ANCHORS, INSERTS AND OPENINGS REQUIRED.
5. SECTIONS DO NOT SHOW REINFORCING FOR SLABS OR BEAMS IN SCHEDULES, UNLESS REQUIRED FOR CLARITY IN PLACING.
6. PROVIDE KEYS IN BEAMS AT CONSTRUCTION JOINTS. LEAVE JOISTS & SLABS ROUGH TO PROVIDE GOOD BOND. APPLY SLUSH COAT AS SPECIFIED.
7. TEMPERATURE STEEL, AT RIGHT ANGLES TO MAIN STEEL FOR SLAB THICKNESSES INDICATED SHALL BE AS FOLLOWS UNLESS OTHERWISE SHOWN:
   #3@15-UP TO 3 7/8" — #3 @12-4" TO 4 7/8" — #3 @ 9-5" TO 5 7/8"
   #3 @8-6" TO 6 7/8" — #3@7 -7" TO 7 7/8" — #4@12-8" & UP
8. WHERE NOT OTHERWISE SHOWN ON THE DRAWINGS, MINIMUM SLAB REINFORCING SHALL BE #4@8 EACH WAY IN BOTTOM.
9. UNLESS OTHERWISE SHOWN: AT OPENINGS THRU SOLID SLABS UP TO 5'-0", PROVIDE SUPPLEMENTARY REINFORCING FOUR SIDES OF OPENING EQUAL TO PRINCIPAL REINFORCING INTERRUPTED BY THE OPENING. INTERRUPTED BARS SHALL BE CUT, LENGTH OF BARS PERPENDICULAR TO SPAN SHALL BE THREE TIES THE WIDTH OF THE OPENING. PLACE 1-#3x4-0 DIAGONAL BAR AT MID-HEIGHT AT EACH CORNER. A SIMILAR ARRANGEMENT OF REINFORCEMENT SHALL BE USED AT CIRCULAR OPENINGS.
10. UNLESS SPECIFICALLY SHOWN OTHERWISE ON THE DRAWINGS OR IN THE SPECIFICATIONS, DEFORMED REINFORCEMENT SHALL COMPLY WITH ASTM A615 OR A617. STIRRUPS, TIES & HOOPS SHALL BE GRADE 40, ALL OTHER REINFORCEMENT SHALL BE GRADE 60. WELDED WIRE FABRIC, OF SIZES SHOWN ON THE DRAWINGS, SHALL CONFORM TO ASTM A185.
11. WHERE HOOKED BARS ARE INDICATED BY THE DRAWINGS THEY SHALL BE FABRICATED IN ACCORDANCE WITH THE FOLLOWING:
    STIRRUPS - IN ACCORDANCE WITH ACI 318-71, 7.1.1.3 — BEAMS & JOISTS - THE HOOK SHALL EXTEND TO WITHIN 2" OF THE SURFACE OF THE MEMBER OPPOSITE THE SURFACE IN WHICH THE BAR IS LOCATED, UNLESS THIS PRODUCES A HOOK SMALLER THAN A MINIMUM HOOK IN WHICH CASE A MINIMUM HOOK SHALL BE USED AND THE BAR INCLINED. ALL OTHER HOOKS SHALL BE STANDARD (NOT MINIMUM HOOKS).
12. ALL CONDUIT, SLEEVES & PIPES EMBEDDED IN CONCRETE SHALL CONFORM TO SECTION 6.3 OF A.C.I. 318-71 & TO THE FOLLOWING: CONCRETE BEAM WIDTHS SHOWN ON THE DRAWINGS ARE THE MINIMUM ALLOWABLE WIDTHS. BEAMS HAVING SLEEVES OR PIPES PASSING THRU THEM WHICH ARE NOT SHOWN ON THE STRUCTURAL DRAWINGS SHALL BE INCREASED IN WIDTH IMMEDIATELY ADJACENT TO THE SLEEVE OR PIPES TO OBTAIN THE SAME CROSS SECTIONAL AREA OF CONC. SHOWN FOR THE MEMBERS.

    SLEEVES AND PIPES SHALL BE PLACED SO THAT REINFORCING STEEL CAN BE PLACED WITH TEH SPECIFIED COVER & CLEAR DIDTANCE BETWEEN BARS: BEAMS SHALL BE WIDENED IF NECESSARY. THE CONCRETE COVERING OF PIPE & SLEEVES SHALL NOT BE LESS THAN ONE INCH. CLEAR DISTANCE BETWEEN SUCH PIPES & SLEEVES SHALL NOT BE LESS THAN ONE AND ONE HALF INCHES.

    THE DIMENSIONED LOCATION & SIZE OF ALL SLEEVES & OPENINGS SHALL BE SHOWN ON THE REINFORCING STEEL SHOP DRAWINGS

    CONDUITS AND PIPES PLACED IN SLABS SHALL NOT BE LARGER IN OUTSIDE DIAMETER THAN ONE-THIRD THE THICKNESS OF THE SLABS.

    CONDUIT AND PIPES SHALL BE PLACED AT MID-HEIGHT OF BEAM. OUTLET BOXES AHLL NOT PENETRATE COVER REQUIRED FOR REINFORCING.

    CONDUIT OR PIPES PLACED IN COLUMNS SHALL NOT DISPLACE MORE THAN 4% OF THE CROSS-SECTIONAL AREA OF THE COLUMN AND SHALL BE LOCATED ON THE CENTERLINE OF THE COLUMN. OUTLET BOXES SHALL NOT PENETRATE COVER REQUIRED FOR REINFORCING.
13. WHERE NOT OTHERWISE SHOWN, THE FOLLOWING REINFORCING SHALL BE USED IN WALLS:
    8" WALLS - #4 @ 10" HORIZ. — #4 @ 16" VERT. - ONE FACE
    10" WALLS - #4 @ 8" HORIZ. — #4 @ 12" VERT. - ONE FACE
    12" WALLS - #5 @ 10" HORIZ. — #4 @ 11" VERT. - ONE FACE
14. ALL CONCRETE WALLS SHALL BE DETAILED IN ELEVATION ON SHOP DRAWINGS. NO MORE THAN 50% OF HORIZ. WALL REINF. SHALL LAP IN A SINGLE VERT. PLANE. STAGGER LAPS. CONCRETE WALLS SHALL BE CAST MONOLITHIC WITH ADJOINING COLUMNS UNLESS SPECIFICALLY NOTED OTHERWISE.
15. THE NOMINAL SIZE OF KEYS AT HORIZ. CONSTRUCTION JOINTS SHALL BE AS FOLLOWS EXCEPT WHERE OTHERWISE SHOWN ON THE DRAWINGS: 8"WALLS - 2x4 10" WALLS - 2x5 12" WALLS - 2x6
16. STRUCTURAL STEEL SHALL CONFORM TO ASTM A36.
17. STRUCTURAL STEEL DETAILING FABRICATION & ERECTION SHALL BE IN ACCORDANCE WITH THE LATEST EDITION OF THE "MANUAL OF STEEL CONSTRUCTION" OF THE AMERICAN INSTITUTE OF STEEL CONSTRUCTION. SHOP DRAWINGS SHALL SHOW COMPLETE WELDING INFORMATION BOTH SHOP AND FIELD, USING AMERICAN WELDING SOCIETY SYMBOLS. SURFACES TO BE WELDED OR ENCASED IN CONCRETE SHALL NOT BE PAINTED. UNLESS OTHERWISE SHOWN OR INDICATED, BOLTED CONNECTIONS SHALL BE MADE USING 3/4"ØDIA. BOLTS CONFORMING TO ASTM A325. BOLTS SHALL BE INSTALLED USING THE TURN OF NUT METHOD IN ACCORDANCE WITH THE LATEST EDITION OF THE SPECIFICATIONS FOR STRUCTURAL JOINTS USING ASTM A 325 OR A490 BOLTS AS APPROVED BY RESEARCH COUNCIL ON RIVETED AND BOLTED STRUCTURAL JOINTS OF THE ENGINEERING FOUNDATION.
18. CONNECTIONS FOR BEAMS WHICH CANNOT CONFORM TO THE "TYPICAL CONNECTION DETAILS" SHALL BE MADE IN ACCORDANCE WITH THE FOLLOWING: WHERE BEAM REACTIONS ARE NOT SHOWN ON THE DRAWINGS, CONNECTIONS SHALL BE DETAILED FOR THE MAXIMUM UNIFORM LOAD WHICH THE BEAM WILL SUPPORT(AS SIMPLE BEAM) FOR THE SPAN SHOWN ON THE DRAWINGS.

    WHERE BEAM REACTIONS ARE SHOWN ON THE DRAWINGS, THE CONNECTIONS SHALL DEVELOP THE REACTIONS SHOWN.

    WHERE REACTIONS ARE SUBJECT TO ECCENTRICITY, SUCH ECCENTRICITY SHALL BE TAKEN INTO ACCOUNT WHEN DETAILING THE CONNECTION.
19. REFER TO MISC. DETAILS SHEET OR PROCESS DRAWINGS FOR DETAILS OF GRATE & FRAMES AT GRATED OPENINGS.
20. ALL PRECAST PANEL CONNECTIONS TO BE DESIGNED & SUPPLIED BY THE PRECASTER (MIN 2 CONNECTIONS PER PANEL)
21. ALL MONO RAIL BEAMS, CONN. & RAILS TO BE DESIGNED BY SUPPLIER
22. ALL CONCRETE SHALL HAVE A 28 DAY COMPRESSIVE STRENGTH AS FOLLOWS:
    FDNS & SLABS ON GRADE & OTHER 3000 P.S.I.
    BEAMS, COLS & STR. SLABS 4000 P.S.I.

EPA PROJECT NO. C130409

CITY OF BRUNSWICK, GA.

SEWERAGE SYSTEM IMPROVEMENTS

ACADEMY CREEK PLANT

DEWATERING/MAINTENANCE BUILDING TYPICAL DETAILS

SCALE		SHEET
AS SHOWN	WIEDEMAN AND SINGLETON ENGINEERS	S - 8
DATE JAN 84	ATLANTA GEORGIA	OF 11

58

AF 10479A-B

SLAB SCHEDULE

	GS1	GS2	GS3	GS4
	10" SLAB	10" SLAB	10" SLAB	10" SLAB
	#5@12 / #5@6	#5@12 3.0 / #5@3	#5@12 / #6@6	3.0 #5@12 3.0 / #6@3

	SI	S2	S3	S4
	10" SLAB	10" SLAB	10" SLAB	8" SLAB
	#4@12 / #4@12	#4@12 / #4@12	#4@12 / #4@12	#5@3 #6@8 / #BER

	RS-1	RS-2	RS-3	RS-3	RS-3	RS-4
	6" SLAB	6" SLAB	6" SLAB	6" SLAB	6" SLAB	6" SLAB
	#4@6" / #4@12"		2'-0" / #5@12"	#5@12"	3'-0" / #5@12"	#6@12"
ALT	#4 & #5@6"					

APPROVED
STATE OF GEORGIA
MAR 15 1984
WATER QUALITY CONTROL SECTION
ENVIRONMENTAL PROTECTION DIVISION
By Curtis E. Bardell Jr.

JACK C. DOZIER P.E.

EPA PROJECT NO. C130409

CITY OF BRUNSWICK, GA.

SEWERAGE SYSTEM IMPROVEMENT

ACADEMY CREEK PLANT
DEWATERING/MAINTENANCE BUILDING

SLAB SCHEDULE

SCALE		SHEET
AS SHOWN	WIEDEMAN AND SINGLETON ENGINEERS	S - 9
DATE	ATLANTA GEORGIA	OF 11
JAN 84		

C. J. Weem

57

AF 10479A-B

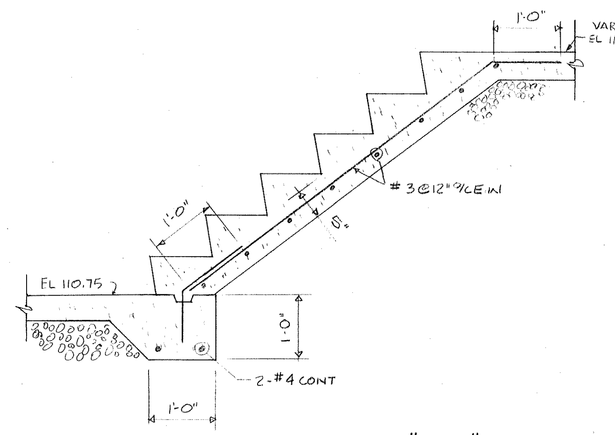

SECTION "K-K"

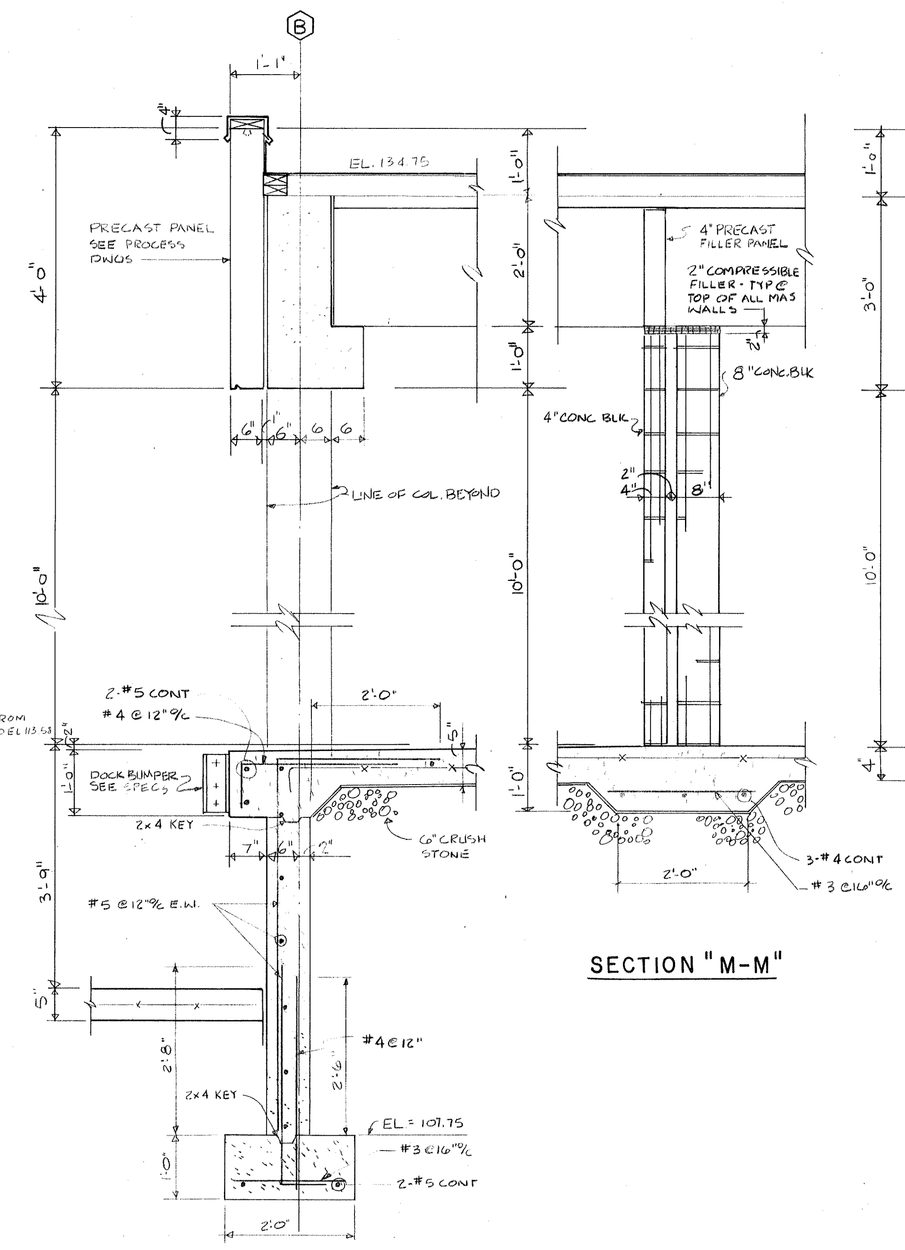

SECTION "L-L"

SECTION "M-M"

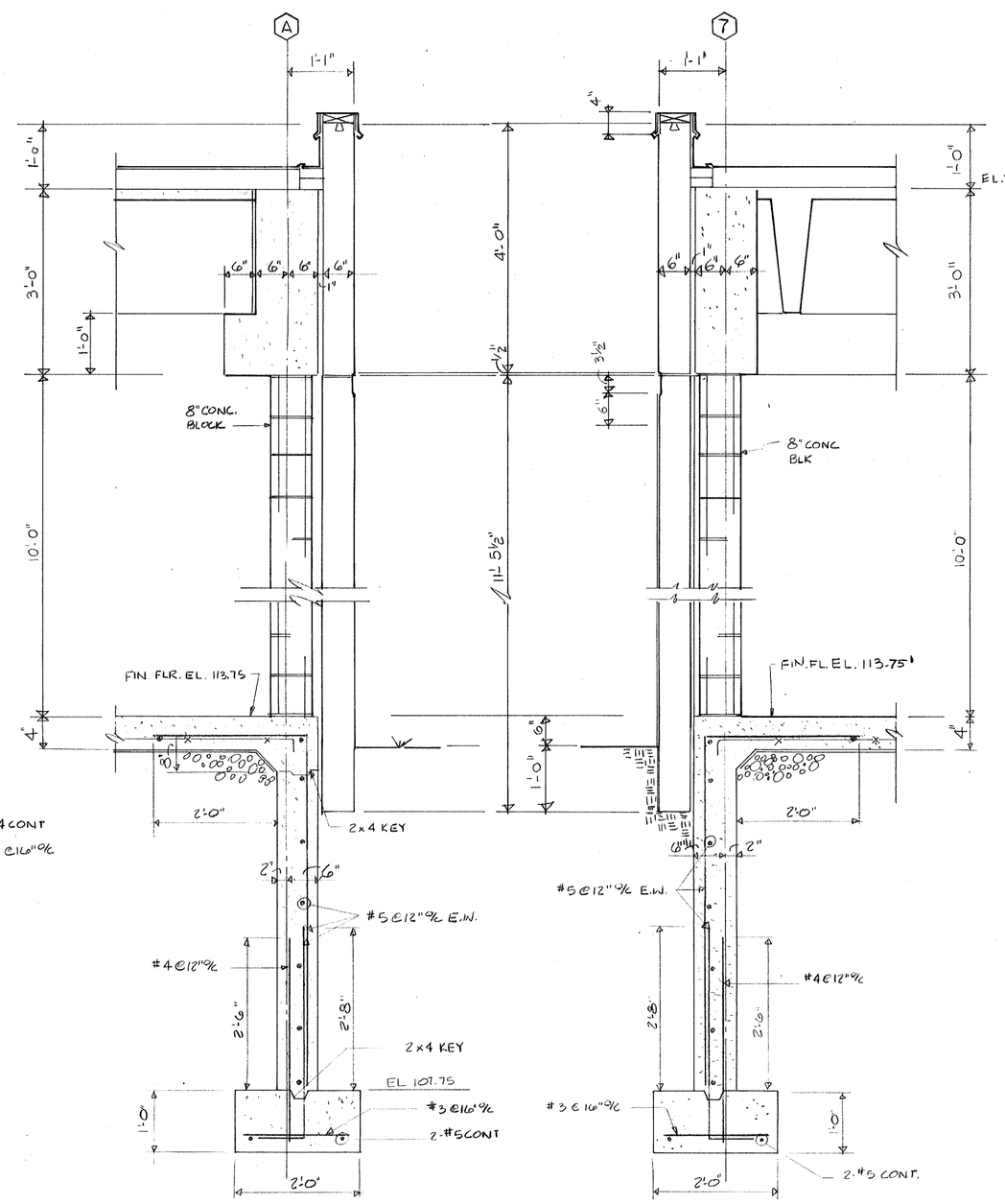

SECTION "N-N"

SECTION "O-O"

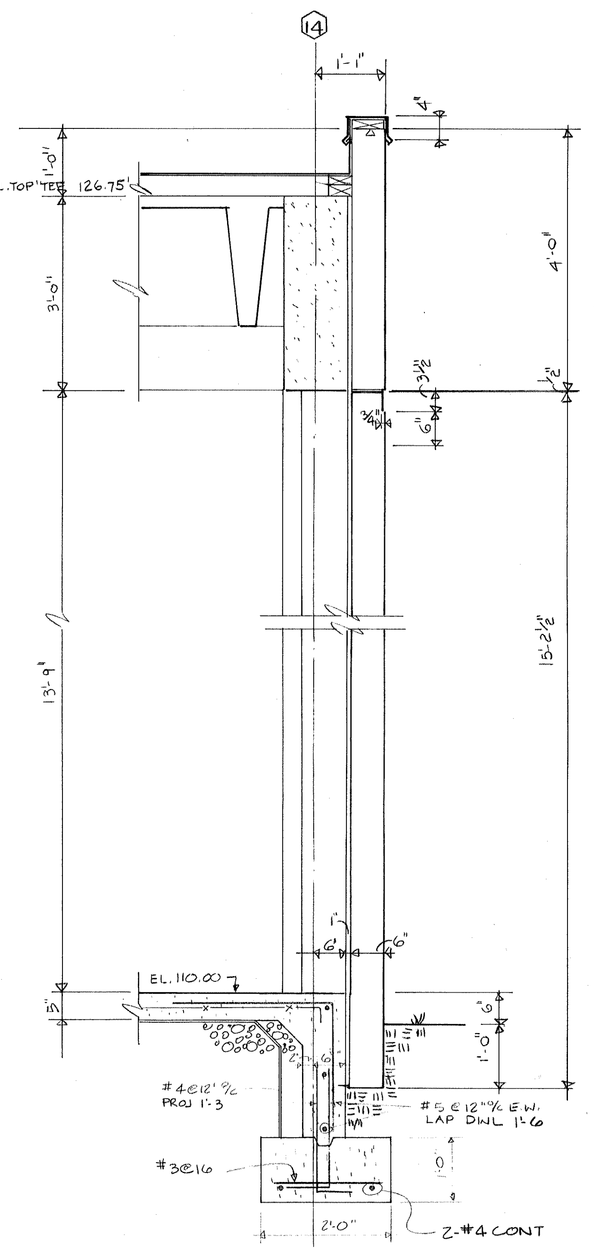

SECTION "P-P"

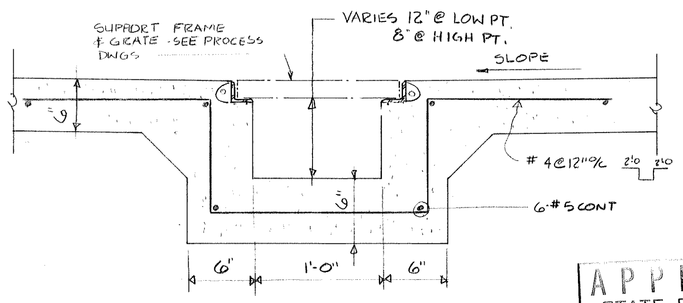

SECTION "S-S"
1-1/2" = 1'-0

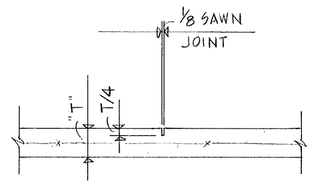

TYPICAL CONTROL JOINT

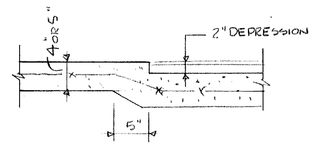

TYPICAL SLAB DEPRESSION

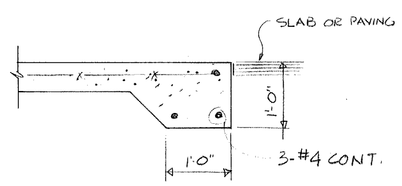

SECTION "T-T"

APPROVED
STATE OF GEORGIA
MAR 15 1984
WATER QUALITY CONTROL SECTION
ENVIRONMENTAL PROTECTION DIVISION
By Curtis E. Bardell Jr.

JACK C. DOZIER P.E.

EPA PROJECT NO. C130409

CITY OF BRUNSWICK
SEWERAGE SYSTEM IMPROVEMENTS

DEWATERING/MAINTENANCE BUILDING
SECTIONS

SCALE		SHEET
3/4"=1'-0" U.S.U. DATE JAN 84	WIEDEMAN AND SINGLETON ENGINEERS ATLANTA GEORGIA	S-10 OF 11

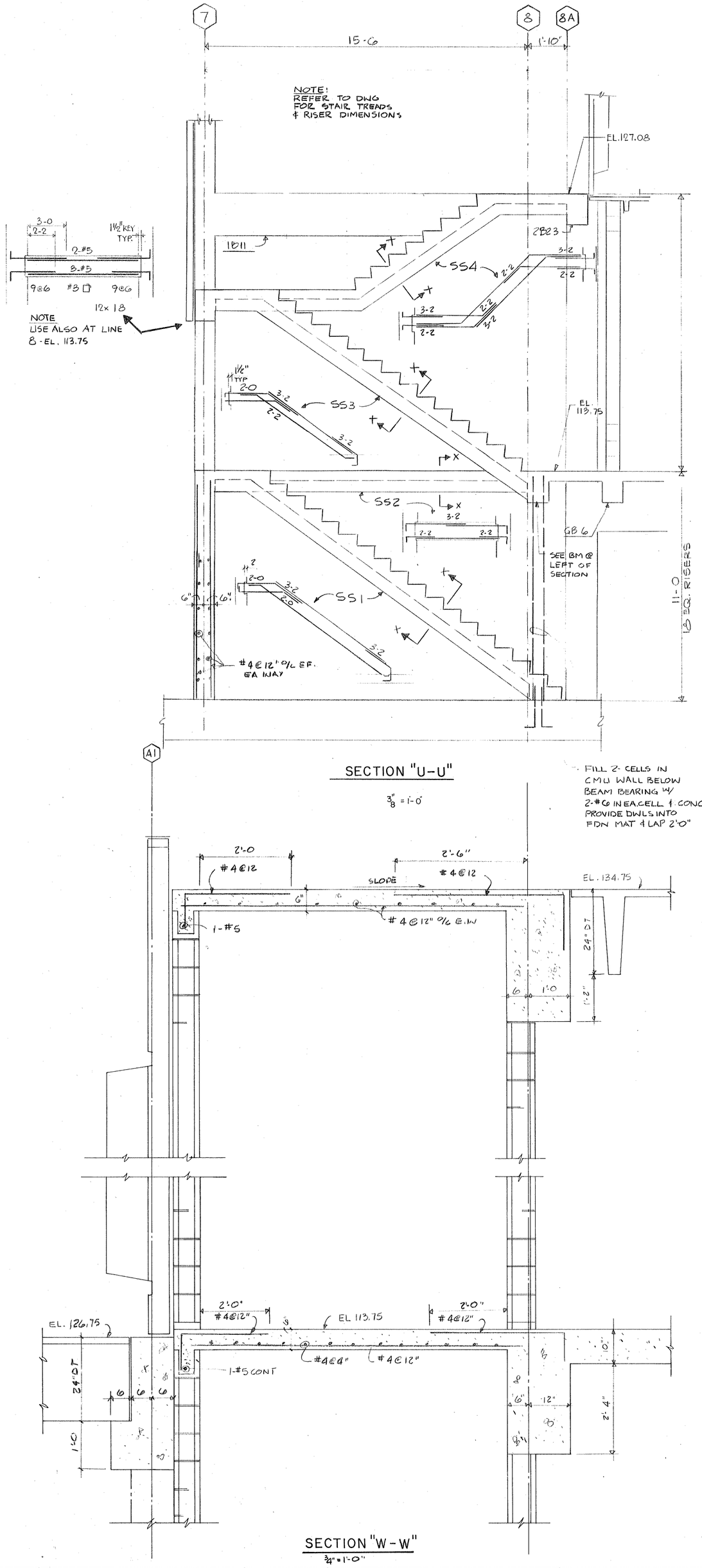

SECTION "U-U"

3/8" = 1'-0"

NOTE
USE ALSO AT LINE
8 - EL. 113.75

FILL 2 CELLS IN CMU WALL BELOW BEAM BEARING W/ 2-#6 IN EACELL & CONC. PROVIDE DWLS INTO FDN MAT & LAP 2'0"

SECTION "W-W"

3/4" = 1'-0"

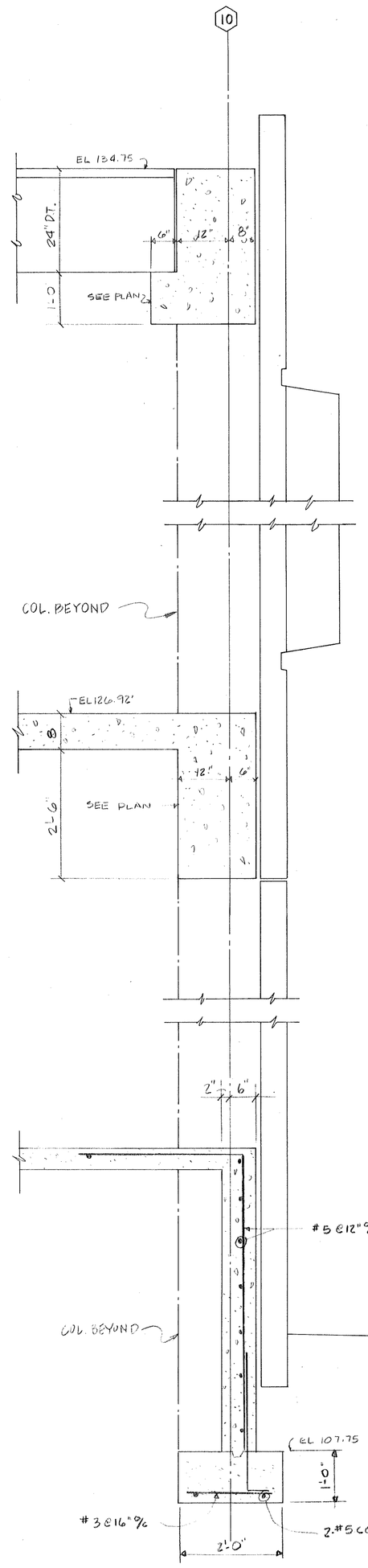

SECTION "V-V"

3/4" = 1'-0"

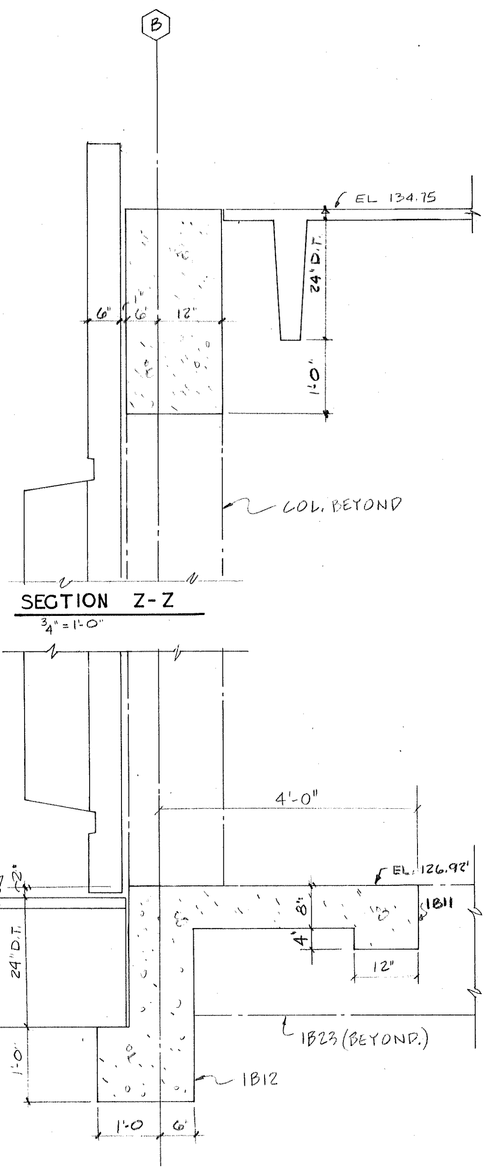

SECTION Z-Z

3/4" = 1'-0"

SECTION "Y-Y"

3/4" = 1'-0"

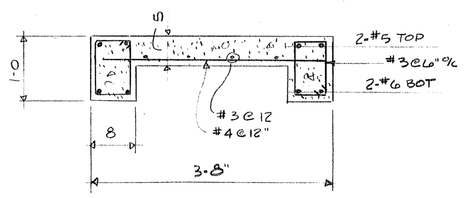

SECTION X-X

3/4" = 1'-0"

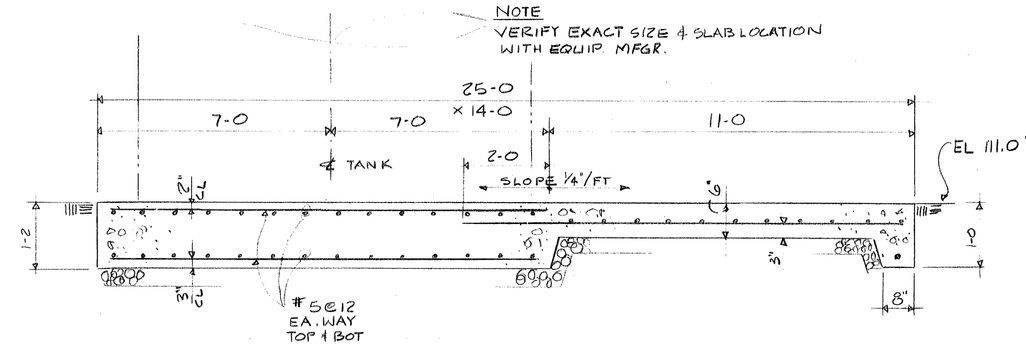

SECTION Z-Z

3/4" = 1'-0"

APPROVED
STATE OF GEORGIA
MAR 15 1984
WATER QUALITY CONTROL SECTION
ENVIRONMENTAL PROTECTION DIVISION
By Carlo E. Bassetti Jr.

JACK C. DOZIER P.E.

EPA PROJECT NO. C130409

CITY OF BRUNSWICK, GA.

SEWERAGE SYSTEM IMPROVEMENTS

ACADEMY CREEK PLANT
DEWATERING/MAINTENANCE BUILDING

SECTIONS

SCALE	WIEDEMAN AND SINGLETON ENGINEERS	SHEET
AS SHOWN		S-11
DATE		OF 11
JAN 84	ATLANTA GEORGIA	

A.F. 10479A-B

LEGEND EXTERIOR LIGHTING

- WALL MOUNTED 150 WATT H.P.S. FLOODLIGHT COMPLETE WITH ALUMINUM WALL BRACKET, GLARE SHIELD & PHOTO ELEC. CELL. McGRAW EDISON CO. # FL 1831-120V. MOUNT TOP 6" BELOW TOP OF WALLS UNLESS INDICATED.
- POLE MOUNTED 150 WATT H.P.S. FLOODLIGHT FIXTURE SHALL BE MOUNTED ON A 14 FT. HIGH ROUND TAPERED ALUMINUM POLE. FIXTURE SHALL HAVE GLARE SHIELD & PHOTO ELEC. CELL McGRAW EDISON CO. # FL.1831-120V., POLE # PA 4002.
- SAME AS ABOVE, EXCEPT WITH TWO FIXTURE ALUMINUM MOUNTING BRACKET. McGRAW EDISON CO. FL. 1831-120V., POLE # PA 4002 BRACKET # FA42.
- EXISTING POLE AND FLOODLIGHTS.

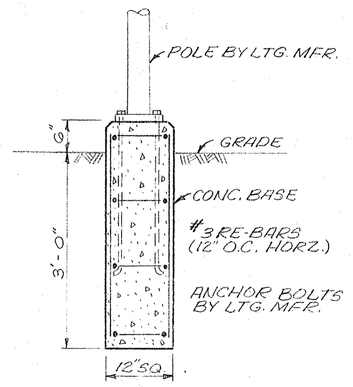

TYPICAL POLE MOUNTING BASE DETAIL
N.T.S.

CLARIFIER NO. 3
CLARIFIER NO. 4
RETURN SLUDGE PUMP STA. NO. 1
CHLORINE CONTACT TANKS
PARSHALL FLUMES
SAMPLE ROOM
CHLORINE BUILDING
GATE
M.H.
8 - 5/C TWISTED SHIELDED CONTROL CABLES - 2" (8 - 2/C TWISTED SHIELDED CONTROL CABLES - 2" (2 - 2/C SPARE).
EXIST. TERMINAL BOX BELOW STAIR LANDING.
2#12 & 1#12 GRD. - 3/4"
OVERHEAD WALKWAY
NEW, CKTS. SP-1 & SP-2 3 #10 & 1 #10 GND. - 1"¼
NEW, 6 - 2/C TWISTED SHIELDED CONTROL CABLES - 1"¼ (2 - 2/C ARE SPARE)
SPLITTER BOX "C"
NEW, 3 #4/0 & 1 #2 GND. - 2½
(RECONNECT TO EXIST. 200/3 BKR. IN MCC-27)
PRESENTLY BEING USED TO SERVE EXIST. WASTE & RETURN SLUDGE P.S.
REMOVE 3 #4/0 & 1 #6 GND., 2½ (200/3 BKR. IN MCC-27 TO BE USED FOR NEW RETURN SLUDGE P.S. #1 FAN REMOVE 2 #10 & 1 #10 G., 1¼ (30/3 BKR. IN MCC-27 TO BECOME A SPARE)
EXIST. MCC 29
PARSHALL FLUME
CLARIFIER NO. 1
CLARIFIER NO. 2
EXIST. J.B. FOR CLARIFIER DRIVE MOTORS
OVERHEAD WALKWAY
EXIST. T.B. ON SIDE OF WALKWAY
CHLORINE CONTACT CHAMBER
EXIST. WASTE & RETURN SLUDGE P.S. (TO BE REMOVED)
SPLITTER BOX "B"
CLARIFIER SPLITTER BOX
OXYGEN PRODUCTION FACILITIES
AERATION BASIN NO. 1
AERATION BASIN NO. 2
HOLDING TANK
INFLUENT SPLITTER BOX "A"
GRIT TANK
PUMPING STATION NO. 4
MECH. SCREEN PLATFORM
EXISTING INF. MH.
INDUSTRIAL WASTE MAGNETIC FLOW METER MH.
EXIST. MCC-28 AERATION BASIN NO. 3 4 CELLS
METER MANHOLE No. 4
3"#12, 1#12(G), ¾" C. CONNECT TO 2-SPARE 20/1 CKT. BKRS. IN PANEL BOARD IN MCC-23 (USE EXIST. 1½" STUB-OUT FROM MCC-23)
2-PR. TW. SH. - ¾" (1-PR. IS SPARE)
PSA COMPRESSOR BUILDING
LIQUID O2 STORAGE TANK
LP GAS M.H.
DIGESTER NO. 1
DIGESTER NO. 2
HEAD HOUSE
1000 GAL. FUEL TANK
OIL TANK FILL BOX
ASPHALT DRIVE
ASPHALT PAVING
EXISTING TERMINAL BOX
TERMINATE 1½" EMPTY AT EXIST. TELE. EQUIPMENT LOCATION
CONTROL BUILDING
BACKFLOW PREVENTER
SPLITTER BOX "D"
COOLING TOWER
SEPTIC WASTE DUMP STATION
EXIST. T.B.
LIQUID SLUDGE TRUCK LOADING
DISSOLVED AIR FLOTATION THICKENER
TERMINAL BOX @ PUMP RM. LEVEL
1-12 PR. TW. SH. - ¾"
DEWATERING
UP TO MCC 20
PULL BOX @ PUMP RM. LEVEL
SERVICE YARD
MAINTENANCE
RECYCLE PUMPING STA.
SS-3
SS-4
TERMINAL BOX
1-12 PR. TW. SH. - 2½"C
MODIFY EXISTING SWITCHBOARD'S
EXIST. DIGESTER STARTER — NOTE 1
2#12 & 1#12 GND. - ¾"
METER M.H.'S
No. 1
No. 2
VALVE CONTROL M.H.
AEROBIC DIGESTER NO. 4
AEROBIC DIGESTER NO. 3
CONNECT TO EXIST. FLOOD LIGHT MTD. ON SIDE OF DIGESTER (FLOODLIGHT IS PRESENTLY NOT CONNECTED ELECTRICALLY)
CAST ALUM. ABOVE GND. PULL BOX, 0 EYEW-A VERIFY PULLBOX ARRANGEMENT & CONDUIT SIZE W/ TEL. CO. PRIOR TO INSTALLATION
2-2/C TW. SH. - ¾" (1-2/C IS SPARE)
1½" EMPTY W/ PULL LINE FOR TELE. CABLE.
3#12 GND. - ¾" (#1 - 4, 2)
METER MANHOLE No. 3
EMPLOYEE PARK'G
2#10 & 1#10 GND. - ¾"
2#12 & 1#12 GND. - ¾"
D.I.
26
STREET
SEABOARD COAST LINE RAILROAD
NEWCASTLE STREET
E/W

NOTE:
1. TWO EXIST. NEMA 1 STARTERS FOR 100 HP DIGESTER ARE PRESENTLY ENCLOSED W/ A TEMPORARY SHELTER REMOVE THIS SHELTER AND INSTALL A NEW NEMA 3R NON WALK-IN ENCLOSURE.

APPROVED
STATE OF GEORGIA
MAR 15 1984
WATER QUALITY CONTROL SECTION
ENVIRONMENTAL PROTECTION DIVISION
By Carlos E. Caldwell Jr.

JACK C. DOZIER P.E.

GEORGIA REGISTERED ENGINEER

EPA PROJECT NO. C130409

CITY OF BRUNSWICK, GEORGIA
SEWERAGE SYSTEM IMPROVEMENTS

ACADEMY CREEK PLANT
ELECTRICAL
SITE PLAN

SCALE		SHEET
1"=30'	WIEDEMAN AND SINGLETON ENGINEERS	E-1
DATE		OF 14
JAN. 1984	ATLANTA GEORGIA	

20

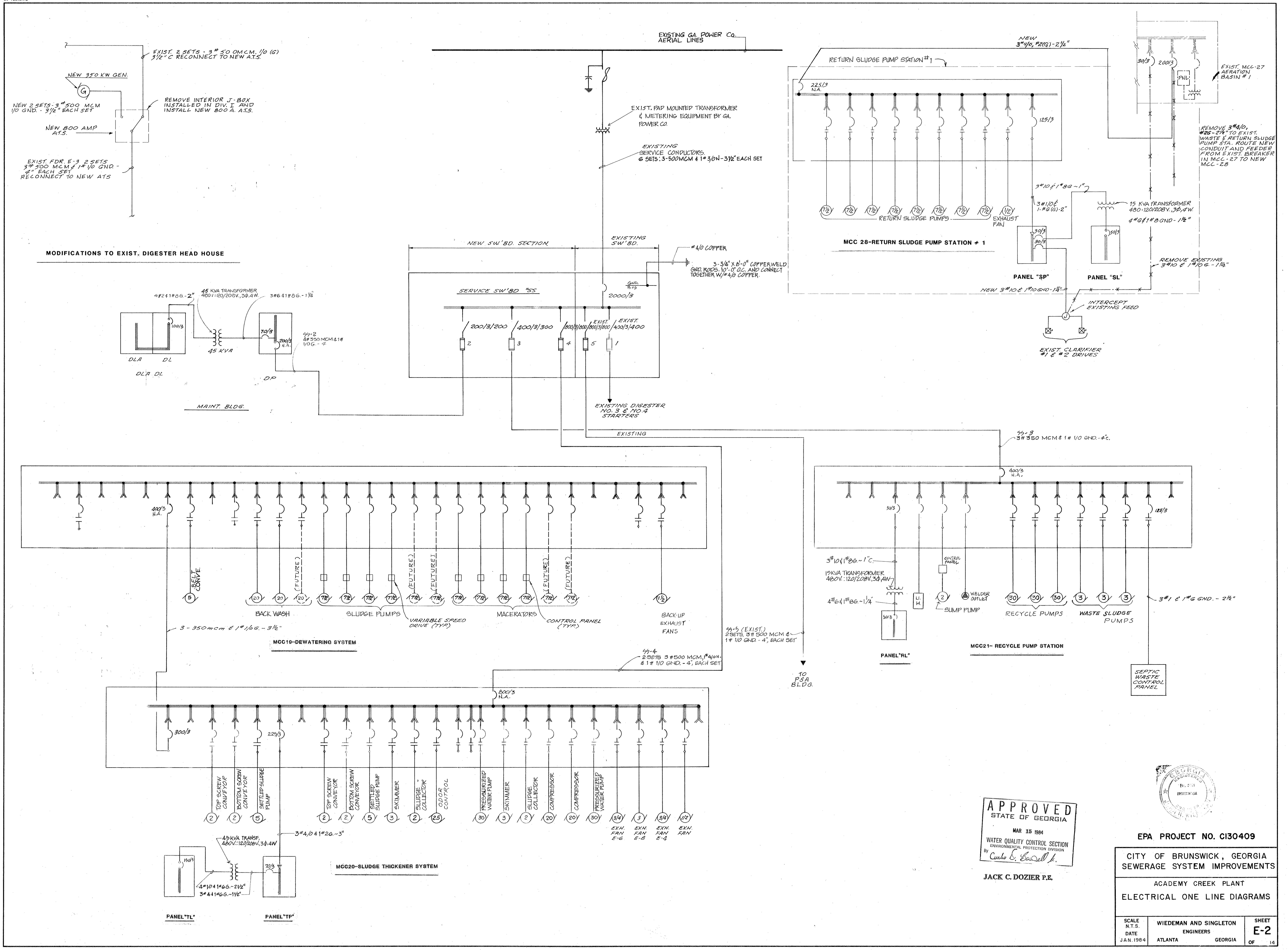

APPROVED
STATE OF GEORGIA
MAR 15 1984
WATER QUALITY CONTROL SECTION
ENVIRONMENTAL PROTECTION DIVISION

JACK C. DOZIER P.E.

EPA PROJECT NO. CI30409

CITY OF BRUNSWICK, GEORGIA
SEWERAGE SYSTEM IMPROVEMENTS

ACADEMY CREEK PLANT
ELECTRICAL ONE LINE DIAGRAMS

SCALE N.T.S. DATE JAN. 1984	WIEDEMAN AND SINGLETON ENGINEERS ATLANTA GEORGIA	SHEET E-2 OF 14

MOTOR CONTROL CENTER SCHEDULES

MCC NO.19 DEWATERING & POLYMER BLENDING SYSTEM, 480V, 3Ø, 3W, WITH GROUND BUS - NEMA 12
MAIN HORIZONTAL BUS 600 AMP BRACED FOR 22,000 RMS AMPS SYMMETRICAL

UNIT NO.	VERTICAL BUS RATING	LOAD SERVED	LOAD HP	LOAD KW	FLA AMPS	CKT. BKR. FRAME	CKT. BKR. TRIP	STARTER NEMA SIZE	STARTER TYPE	STARTER INTERNAL DEVICES N.O. CONTACT	STARTER INTERNAL DEVICES N.C. CONTACT	STARTER MISC. DEVICES	COVER MTD. DEV'S PILOT LIGHTS	COVER MTD. DEV'S SELECTOR SWITCHES	SPACE FACTOR	REMARKS
A1	450	METERING	—	—	—	—	—	—	—	—	—	—	—	—	1	AMMETER, VOLTMETER & SELECTOR SW.'S.
A2		SPACE	—	—	—	—	—	—	—	—	—	—	—	—	1	
A3		SPACE	—	—	—	—	—	—	—	—	—	—	—	—	1/2	
A4		SPACE	—	—	—	—	—	—	—	—	—	—	—	—	1 1/2	
A5		MAIN CKT. BKR.	157	0	189	TJK	400 N.A.	—	—	—	—	—	—	—	2	
B1	300	BELT CONVEYOR	5	—	8	THED	20	1	FVNR	2	2	120V. CPT & COIL	R.	—	1	NOTE 4
B2		SPACE	—	—	—	—	—	—	—	—	—	—	—	—	1	
B3		SPACE	—	—	—	—	—	—	—	—	—	—	—	—	1	
B4		BACK WASH PUMP	20	—	27	THED	60	2	FVNR	2	2	120V CPT & COIL	R.	—	1	REMOTE S-S IN BELT PRESS CONTROL PANEL
B5														—	1	
B6														—	1	FUTURE
C1	300	SLUDGE FEED PUMP	7½	—	11		30	—	—	—	—	—	—	—	½	
C2		MACERATOR		—				—	—	—	—	—	⊥	—		
C3		SLUDGE FEED PUMP		—				—	—	—	—	—	—	—		
C4		MACERATOR		—				—	—	—	—	—	—	—		
C5		SLUDGE FEED PUMP		—				—	—	—	—	—	—	—		
C6		MACERATOR		—				—	—	—	—	—	—	—		
C7		SLUDGE FEED PUMP		—				—	—	—	—	—	—	—		
C8		MACERATOR		—				—	—	—	—	—	—	—		
C9		FUTURE SLUDGE FEED PUMP		—				—	—	—	—	—	—	—		
C10		FUTURE MACERATOR		—				—	—	—	—	—	—	—		
C11		FUTURE SLUDGE FEED PUMP		—				—	—	—	—	—	—	—		
C12		FUTURE MACERATOR		—				—	—	—	—	—	—	—		
D1	300	SPARE	—	—	—	THED	15	1	FVNR	2	2	120V. CPT & COIL	R	H-O-A	1	
D2		EXHAUST FAN	1½	—	3	THED	15	1	FVNR	2	2	120V. CPT. & COIL	R.	H.O.A.	1	
D3		SPARE	—	—	—										1	
D4		SPARE	—	—	—										1	FUTURE
D5		SPACE	—	—	—	—	—	—	—	—	—	—	—	—	1	
D6		SPACE	—	—	—	—	—	—	—	—	—	—	—	—	1	

MCC NO.19 SLUDGE THICKENER SYSTEM 480V, 3Ø, 4W - NEMA 12
MAIN HORIZONTAL BUS 600 AMP CONTINUED

UNIT NO.	VERTICAL BUS RATING	LOAD SERVED	LOAD HP	LOAD KW	FLA AMPS	CKT. BKR. FRAME	CKT. BKR. TRIP	STARTER NEMA SIZE	STARTER TYPE	STARTER INTERNAL DEVICES N.O. CONTACT	STARTER INTERNAL DEVICES N.C. CONTACT	STARTER MISC. DEVICES	COVER MTD. DEV'S PILOT LIGHTS	COVER MTD. DEV'S SELECTOR SWITCHES	SPACE FACTOR	REMARKS
A1	800	MAIN CKT BREAKER	310	100	414	TKMB	800 N.A.	—	—	—	—	—	—	—	6	AMMETER, VOLTMETER & SELECTOR SW.'S
B1	600	MCC 19	157	—	189	TJK	400	—	—	—	—	—	—	—	2½	
B2		SPACE	—	—	—	—	—	—	—	—	—	—	—	—	½	
B3		SPARE	—	—	—	THED	15	1	FVNR	2	2	120V. CPT & COIL	R.	—	1	
B4		SPARE	—	—	—									—	1	
B5		SPACE	—	—	—	—	—	—	—	—	—	—	—	—	1	
C1	450	PANEL "TP"	—	100	—	TFK	225	—	—	—	—	—	—	—	2	
C2		SPACE	—	—	—	—	—	—	—	—	—	—	—	—	1	
C3		TOP SCREW CONVEYOR	2	—	4	THED	15	1	FVNR	2	2	120V CPT & COIL	R.	—	1	NOTE 2
C4		BOTTOM SCREW CONVEYOR	2	—	4									—		NOTE 1
C5		SETTLED SLUDGE PUMP	5	—	8		20							S.S. M.C.	1	NOTE 3
D1	300	SKIMMER	3	—	5		15							H-O-A	1	NOTE 2
D2		SLUDGE COLLECTOR	2	—	4			1	FVNR	2	2	120V CPT & COIL	R.	H-O-A	1	NOTE 1
D3		COMPRESSOR	20	—	27	THED	60	—	—	—	—	—	—	—	1/2	
D4				—				—	—	—	—	—	—	—	1/2	
D5		EXH. FAN E-6	¾	—	1.4		15	1	FVNR	2	2	120 VC PT & COIL	R	H-O-A	1	
D6		EXH. FAN E-8	¾	—	1.4		15	1							1	
D7		PRESSURIZED WATER PUMP	30	—	40	TFK	90	3						S.S. M.C.	2	NOTE 3
E1	300	SKIMMER	3	—	5	THED	15	1						H-O-A	1	NOTE 2
E2		SLUDGE COLLECTOR	2	—	4									H-O-A	1	NOTE 1
E3		EXH. FAN E-4	¾	—	1.4									H-O-A	1	
E4		EXHAUST FAN	½	—	2									H-O-A	1	
E5		PRESSURIZED WATER PUMP	30	—	40	TFK	90	3						S.S. M.C.	2	NOTE 3

MCC NO.20 BRACED FOR 22,000 RMS AMPS SYMMETRICAL

UNIT NO.	VERTICAL BUS RATING	LOAD SERVED	LOAD HP	LOAD KW	FLA AMPS	CKT. BKR. FRAME	CKT. BKR. TRIP	STARTER NEMA SIZE	STARTER TYPE	STARTER INTERNAL DEVICES N.O. CONTACT	STARTER INTERNAL DEVICES N.C. CONTACT	STARTER MISC. DEVICES	COVER MTD. DEV'S PILOT LIGHTS	COVER MTD. DEV'S SELECTOR SWITCHES	SPACE FACTOR	REMARKS
F1	300	ODOR CONTROL	25	—	34	TFK	70	2	FVNR	2	2	120 V. CPT. & COIL	R	—	1½	
F2		SPACE	—	—	—	—	—	—	—	—	—	—	—	—	1½	
F3		SPACE	—	—	—	—	—	—	—	—	—	—	—	—	1	
F4		TOP SCREW CONVEYOR	2	—	4	THED	15	1	FVNR	2	2	120 V. CPT. & COIL	R.	—	1	NOTE 2
F5		BOTTOM SCREW CONVEYOR	2	—	4									—	1	NOTE 1
F6		SETTLED SLUDGE PUMP	5	—	8		20							S.S. M.C.	1	NOTE 3

MCC NO.21 RECYCLE PUMPING STATION 480V, 3Ø, 3W, GND BUS BRACED FOR 22,000 RMS AMPS SYMMETRICAL

UNIT NO.	VERTICAL BUS RATING	LOAD SERVED	LOAD HP	LOAD KW	FLA AMPS	CKT. BKR. FRAME	CKT. BKR. TRIP	STARTER NEMA SIZE	STARTER TYPE	STARTER INTERNAL DEVICES N.O. CONTACT	STARTER INTERNAL DEVICES N.C. CONTACT	STARTER MISC. DEVICES	COVER MTD. DEV'S PILOT LIGHTS	COVER MTD. DEV'S SELECTOR SWITCHES	SPACE FACTOR	REMARKS
A1	300	METERING	—	—	—	—	—	—	—	—	—	—	—	—	1	AMMETER, VOLTMETER & SELECTOR SW.'S
A2a		HEATER	—	5	6	THED	20	—	—	—	—	—	—	—	½	
A2b		SUMP PUMP	2	—	4		15	—	—	—	—	—	—	—	½	
A3a		TRANSFORMER	—	15KVA	18		30	—	—	—	—	—	—	—	½	
A3b		50A/3Ø RECEPT.	—	—	—		50	—	—	—	—	—	—	—	½	
A4		SPACE	—	—	—	—	—	—	—	—	—	—	—	—	1	
A5		MAIN CKT. BREAKER	146	20	—	TJKA	400 N.A.	—	—	—	—	—	—	—	2	
B1	300	RECYCLE PUMP	30	—	40	TFK	90	3	FVNR	2	2	120V. CPT & COIL	R	H-O-A	2	SEE SCHEMATIC THIS SHEET
B2				—											2	
B3				—											2	
C1	300	SPACE	—	—	—	—	—	—	—	—	—	—	—	—	1	
C2		WASTE SLUDGE PUMP	3	—	5	THED	15	1	FVNR	2	2	120V. CPT & COIL	R.	—	1	SEE SCHEMATIC THIS SHEET
C3		100' RST		—			15							—	1	
C4				—			15							—	1	
C5	300	SPACE	—	—	—	—	—	—	—	—	—	—	—	—	1	
C6	300	SEPTIC WASTE PUMP STATION	45	—	—	TFK	125	—	—	—	—	—	—	—	1	

MCC NO.21 RECYCLE PUMPING STATION 480V, 3Ø, 4W - NEMA 12
MAIN HORIZONTAL BUS 600 AMP BRACED FOR 22,000 RMS AMPS SYMMETRICAL

UNIT NO.	VERTICAL BUS RATING	LOAD SERVED	LOAD HP	LOAD KW	FLA AMPS	CKT. BKR. FRAME	CKT. BKR. TRIP	STARTER NEMA SIZE	STARTER TYPE	STARTER INTERNAL DEVICES N.O. CONTACT	STARTER INTERNAL DEVICES N.C. CONTACT	STARTER MISC. DEVICES	COVER MTD. DEV'S PILOT LIGHTS	COVER MTD. DEV'S SELECTOR SWITCHES	SPACE FACTOR	REMARKS
A-1	300	MAIN CIRCUIT BREAKER	70	23	—	TFJ	225 N.A.	—	—	—	—	—	—	—	1½	
A-2		SPACE	—	—	—	—	—	—	—	—	—	—	—	—	½	
A-3		EXHAUST FAN	½	—	2	THED	15	1	FVNR	2	2	120 V. CPT. & COIL	R.	—	1	
A-4		RETURN SLUDGE PUMP	7½	—	11		30							—	1	SEE SCHEMATIC THIS SHEET
A-5		100' RST		—											1	
A-6				—											1	
B-1		PANEL "SP"	10	23	—	TFK	125	—	—	—	—	—	—	—	1	
B-2		RETURN SLUDGE PUMP	7½	—	11	THED	30	1	FVNR	2	2	120 V. CPT. & COIL	R.	—	1	SEE SCHEMATIC THIS SHEET
B-3			7½	—	11	THED	30	1	FVNR	2	2	120 V. CPT. & COIL	R.	—	1	
B-4				—											1	
B-5				—											1	
B-6				—											1	

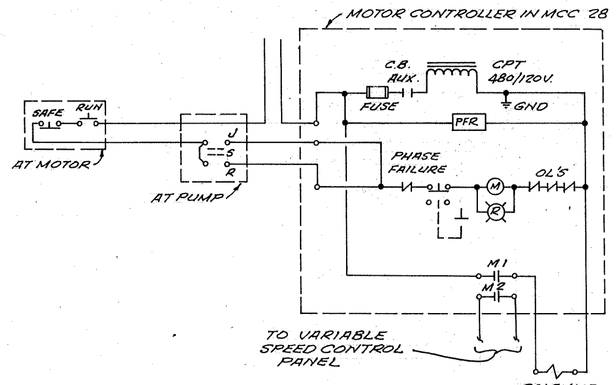

SCHEMATIC
RETURN SLUDGE PUMPS

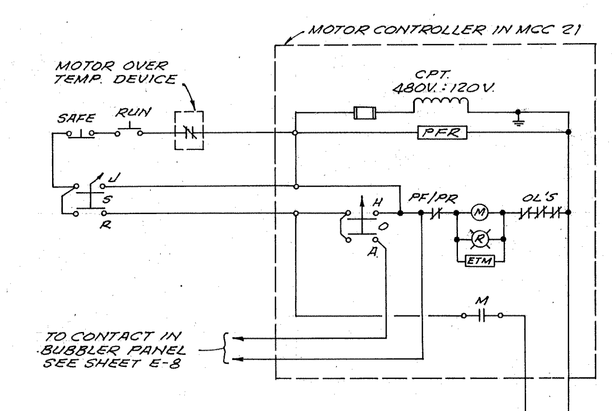

SCHEMATIC
RECYCLE PUMP STATION
(TYPICAL OF SIX PUMPS)

NOTE:
ALL AUXILLIARY CONTACTS SHALL BE FIELD CONVERTIBLE
H-O-A = HAND - OFF - AUTO
S.S.M.C. = START - STOP MAINTAINED CONTACT

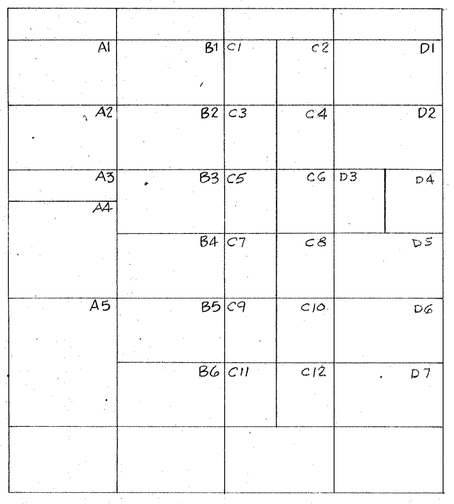

MCC 19

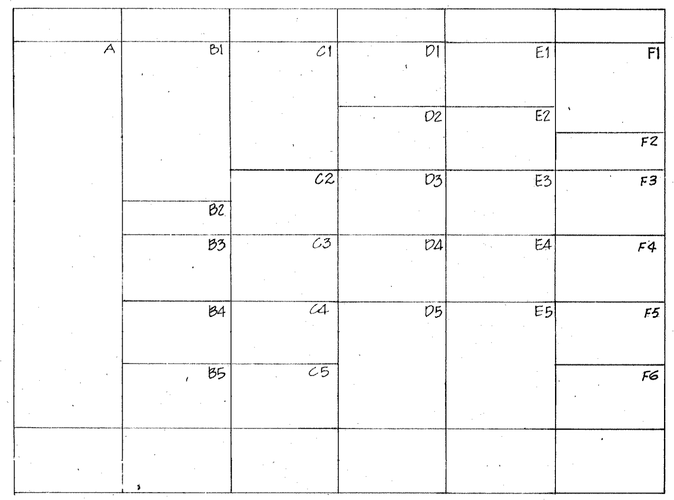

MCC 20

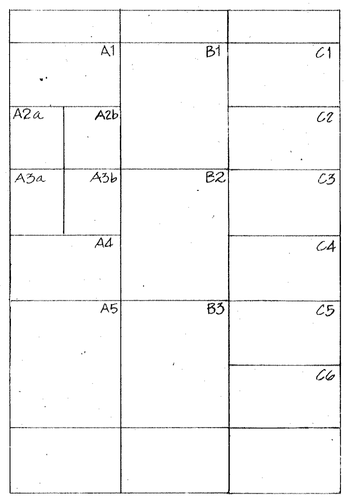

MCC 21

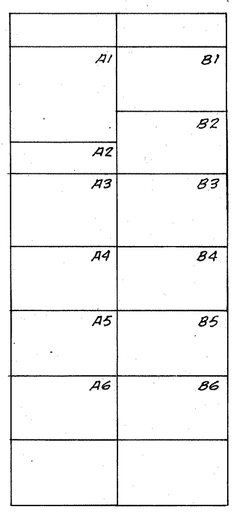

MCC 28

NOTES

1. AUTO POSITION SHALL BE CONTROLLED BY TIME CLOCK, INTERLOCK SLUDGE COLLECTOR W/ BOTTOM SCREEN CONVEYOR. PROVIDE TIME DELAY RELAY TO INSURE CONVEYOR RUNS 2 MINUTES MINIMUM AFTER SLUDGE COLLECTOR STOPS.
2. SKIMMER & TOP SCREW CONVEYOR SHALL ALSO BE CONTROLLED AS DESCRIBED IN NOTE 1.
3. SETTLED SLUDGE PUMPS AND PRESSURIZED WATER PUMPS SHALL HAVE REMOTE J-S-R AT PUMP.
4. BELT CONVEYOR STARTER CONTROL SHALL BE WIRED THRU N.O. CONTACTS IN BELT PRESS CONTROL PANELS.

APPROVED
STATE OF GEORGIA
MAR 15 1984
WATER QUALITY CONTROL SECTION
ENVIRONMENTAL PROTECTION DIVISION
By Charles L. Bardell Jr.

JACK C. DOZIER P.E.

GEORGIA REGISTERED No. 7021 PROFESSIONAL ENGINEER JOHN H. WIEDEMAN

EPA PROJECT NO. CI30409

CITY OF BRUNSWICK, GEORGIA
SEWERAGE SYSTEM IMPROVEMENTS

ACADEMY CREEK PLANT
MOTOR CONTROL CENTER

SCHEDULES AND ELEVATIONS

SCALE		SHEET
NONE	WIEDEMAN AND SINGLETON ENGINEERS	E-3
DATE		OF 14
JAN. 1984	ATLANTA GEORGIA	

SYMBOLS SCHEDULE-ELECTRICAL

- FLUORESCENT LIGHTING FIXTURE - WALL OR CEILING MOUNTED, RESPECTIVELY - NUMERAL INDICATES CIRCUIT NUMBER, LETTER INDICATES FIXTURE TYPE. REFER TO LIGHTING FIXTURE SCHEDULE THIS SHEET
- INCANDESCENT OR HIGH INTENSITY DISCHARGE LIGHTING FIXTURES - WALL OR CEILING MOUNTED, RESPECTIVELY - NUMERAL INDICATES CIRCUIT NUMBER. LETTER INDICATES FIXTURE TYPE. REFER TO LIGHTING FIXTURE SCHEDULE THIS SHEET
- BATTERY POWERED EMERGENCY LIGHTING UNIT. REFER TO LIGHTING FIXTURE SCHEDULE THIS SHEET - TYPE 8A FIXTURE
- EXIT LIGHTING FIXTURE. REFER TO LIGHTING FIXTURE SCHEDULE THIS SHEET
- S — 1PST SWITCH (IF USED, LOWER CASE LETTER INDICATES DEVICE(S) CONTROLLED)
- S2 — 2PST SWITCH (IF USED, LOWER CASE LETTER INDICATES DEVICE(S) CONTROLLED)
- S3 — 3-WAY SWITCH (IF USED, LOWER CASE LETTER INDICATES DEVICE(S) CONTROLLED)
- ST — MANUAL MOTOR STARTING SWITCH, WITH THERMAL OVERLOAD PROTECTION
- SM — MANUAL MOTOR STARTING SWITCH WITHOUT THERMAL OVERLOAD PROTECTION
- MANUAL MOTOR STARTER
- SP — SWITCH WITH PILOT LAMP
- SIMPLEX RECEPTACLE
- DUPLEX RECEPTACLE
- DUPLEX RECEPTACLE-SPLIT WIRED
- SPECIAL PURPOSE OUTLET - TYPE AS INDICATED
- THERMOSTAT
- GROUND GRID - SEE DETAIL THIS SHEET
- CP — CONTROL PANEL
- F — FIRE ALARM PULL STATION
- FIRE ALARM HORN
- FA — FIRE ALARM CONTROL PANEL
- M.C.C. — MOTOR CONTROL CENTER
- GND. — GROUND
- U.H. — UNIT HEATER - KW AS INDICATED
- E.H.C. — ELECTRIC HEATING COIL
- WP — WEATHERPROOF
- J — JUNCTION BOX
- A.F.F. — ABOVE FINISHED FLOOR
- E.W.C. — ELECTRIC WATER COOLER
- G.F.I. — GROUND FAULT INTERRUPTER DEVICE
- P.E. — PHOTOELECTRIC CELL
- C — CLOCK HANGER OUTLET. WALL AND CEILING MOUNTED RESPECTIVELY
- SAFETY OR DISCONNECT SWITCH - SIZE/POLES/FUSES AS INDICATED
- MAGNETIC MOTOR STARTER OR CONTACTOR
- COMBINATION MAGNETIC MOTOR STARTER AND DISCONNECT - SIZE/POLES/FUSES OR TRIPS AS INDICATED
- INDIVIDUAL MOUNTED CIRCUIT BREAKER - TRIP/POLES AS INDICATED
- PANELBOARD - REFER TO APPROPRIATE PANELBOARD SCHEDULE FOR REQUIREMENTS
- PLYWOOD BACKBOARD - SIZE AS INDICATED OR AS SPECIFIED
- LA-1,3 — CONDUIT HOMERUN TO PANELBOARD, CROSS MARKS INDICATE THE NUMBER OF #12 CONDUCTORS
- CONDUIT CONCEALED IN OR ABOVE CEILING OR IN WALL CAVITY
- CONDUIT EXPOSED
- CONDUIT IN FLOOR OR UNDERGROUND
- T — CONDUIT HOMERUN TO TELEPHONE BACKBOARD
- FLEXIBLE CONDUIT
- CONDUIT TURNED OUT ABOVE CEILING AND TERMINATED WITH INSULATING BUSHING
- CONDUIT TURNED UP
- CONDUIT TURNED DOWN
- JUNCTION BOX OR PULL BOX - SIZE AS REQUIRED, UNLESS INDICATED
- J OR J — JUNCTION OUTLET BOX - WALL OR CEILING MOUNTED, RESPECTIVELY
- DRY TYPE TRANSFORMER - KVA AS INDICATED
- 5 — MOTOR - NUMERAL INDICATES HORSEPOWER - "F" INDICATES MOTOR IS LESS THAN 1/3 HORSEPOWER
- TELEPHONE OUTLET
- E.C. — EMPTY CONDUIT WITH PULL LINE
- CKT. — CIRCUIT
- DWG. — DRAWING
- LTG. — LIGHTING
- H — HEAT DETECTOR
- S — SMOKE DETECTOR
- H — HANDHOLE
- TB — TERMINAL BOX
- S.S. — START-STOP PUSHBUTTON
- H.O.A. — HAND-OFF-AUTO

LIGHTING FIXTURE SCHEDULE

TYPE	MANUFACTURER & CATALOG Nº	LAMPS	VOLTS	DESCRIPTION
A	BENJAMIN FL-1024-4U; DAYBRITE 4021-4; METALUX DIM240-CEP-POR	2-F40/T12/CW	120	4' INDUSTRIAL FLUORESCENT WITH PORCELAIN REFLECTORS. PROVIDING A MAXIMUM OF 20% UPLIGHT.
B	BENJAMIN AGA-7224-4; DAYBRITE 24GE22A; METALUX 2RG-240A	2-F40/T12/CW	120	2'×4' FLUORESCENT TROFFER WITH .125 THICK ACRYLIC PRISMATIC LENS.
C	COLUMBIA LTG. GJ14-52-142; DAYBRITE 1×42-707; METALUX MR-240A	2-F40/T12/CW	120	1'×4' SURFACE MOUNTED FLUORESCENT WITH .125 THICK ACRYLIC LENS, HINGED & LATCHED ALUMINUM DOOR
D	MC PHILBEN G-606-PFJB; PRESCOLITE 488HF-1; MARCO 51-T150	100W (A-19)	120	RECESSED SQUARE INCANDESCENT DOWNLIGHT, SUITABLE FOR DAMP LOCATIONS, FLAT ALBA LENS, PLASTER FRAME PRE-WIRED JUNCTION BOX.
E	MCPHILBEN 4M-2231-JB; PRESCOLITE 1313 H4F-8; MARCO M522-T1257	100W MERC.VAP.	120	RECESSED SQUARE DOWNLIGHT, FLAT PRISMATIC LENS, WEATHER-TIGHT & PRE-WIRED.
F	BENJAMIN AGA-7724-2; DAYBRITE 22GR2UA; METALUX 2RG-2UGA	2-40W R.S/CW U-SHAPED	120	2'×2' FLUORESCENT TROFFER WITH .125 THICK ACRYLIC PRISMATIC LENS.
G	BENJAMIN 9-24-4; METALUX SS-240-ACL2; LITHONIA C240	2-40W R.S/CW	120	4' LONG STRIPLIGHT
H	LIGHTRON 14-240RS; MILLER KO-2100-04; DAYBRITE WR41241	2-F40/T12/CW/R.S.	120	4' INDUSTRIAL FLUORESCENT, ENCLOSED & GASKETED, CORROSION RESISTANT HOUSING & CLEAR ACRYLIC LENS.
I	PRESCOLITE —— 1226S6-70HPS-652; CONTEMPORARY ARCH. LTG. (LITHONIA)-HA-70S-ARM	70W-H.P.S.	120	RECESSED H.I.D DOWNLIGHT WITH OPEN ALZAK REFLECTOR (10" APERATURE), PREWIRED JUNCTION BOX, LABELED SUITABLE FOR DAMP LOCATIONS
J	NOT USED			
K	BENJAMIN ISL-070-120; RED DOT VMS-70W-GC; HAZLUX (TTT) DS07H12-GG-B2	70W H.P.S.	120	WALL MOUNTED H.I.D ENCLOSED & GASKETED, CAST ALUMINUM HOUSING, THERMAL RESISTANT GLOBE & GUARD
L	G.E. PM-117; J.H. SPAULDING PT-100-; STERNER JH-24-D-P-120-S	100W H.P.S.	120	POST MOUNTED OUTDOOR AREA LIGHT, ACRYLIC REFRACTOR, WEATHERPROOF HOOD ASSEMBLY PHOTO-ELEC. CELL RECEPTACLE, SLIPFITTER FOR 2½" PIPE
M	HUBBELL HOU-02505-1A1; BENJAMIN ILS-250-120-1GS	250W H.P.S.	120	INDUSTRIAL H.I.D. HI-BAY FIXTURE WITH OPEN ALUMINUM REFLECTOR, LOW PROFILE MOUNTING
A1	BENJAMIN FL-1021-BU; DAYBRITE 40411-B; METALUX 8TDIM-240	4-40W. R.S.	120	8' INDUSTRIAL FLUORESCENT WITH PORCELAIN REFLECTORS PROVIDING A MAXIMUM 20% UPLIGHT
A2	BENJAMIN FL-1025-BU; DAYBRITE R-81252-B; METALUX DIM-246HO	2F96/T12/CW/HO	120	SAME AS FIXT. TYPE "A-1" EXCEPT BOOMA/NO LAMPS
X	DUALITE WRWW; EXIDE XB/1R; LITECOR R-1	INCANDESCENT LAMPS-PER MFR.	120	STANDARD WALL SURFACE-MOUNTED EXIT LIGHT WITH DOWNLIGHT APERTURES
XA	DUALITE WRWWSG; LITE-COR EPR-1; LIGHTALARMS XE-D	INCANDESCENT LAMPS-PER MFR.	120	WALL SURFACE-MOUNTED SELF-POWERED EXIT SIGN WITH BOTTOM APERTURE LENS-MINIMUM 90 MINUTES OF LIGHT ON NORMAL POWER FAILURE
N	PERFECTLITE HPS 29-70/120/EXP; KEENE 533-70LX; McPHILBEN 2283162 JB	70W H.P.S.	120	WALL SURFACE MOUNTED FIXTURE, SUITABLE FOR WET LOCATIONS, SHOCK RESISTANT LENS P.E. CELLS
P	HUBBELL MHS-00705-168; KEENE CMH-70LX	70W H.P.S.	120	WEATHERTIGHT CORROSION RESISTANT FLOODLIGHT WITH CAST ALUMINUM HOUSING & DOOR FRAME, VANDAL RESISTANT LENS, INTEGRAL BALLAST (P.E. CELLS)
Q	LIGHTRON W71-240; McPHILBEN 37-80A	2-F40/T12/CW	120	4 FT. LONG FLUORESC. LTG. FIXTURE FOR WALL MOUNTING ABOVE MIRROR

FIXTURE TYPE "8A"

6 VOLT LEAD CALCIUM MAINTENANCE FREE BATTERY, AUTOMATIC SOLID STATE CHARGER, ALL METAL HOUSING WITH A WOOD GRAIN FRONT PANEL. UNIT SHALL CONSIST OF 2-25 WATT SEALED BEAM LIGHTING HEADS THAT WILL ILLUMINATE FOR A MINIMUM OF 90 MINUTES AFTER A.C. POWER FAILURE. 120 VOLTS A.C., 60 HZ INPUT
LIGHT ALARMS #2P12G1
EMERGI-LITE #LSM54-2CC

SLUDGE THICKENER SHT. E-9 — TL

120/208 V., 3Φ, 4 W. W/GND BUS 150 A., 3P MAIN BREAKER 225 AMP BUS, SURFACE MTD.

LOAD	CKT NO	BKR RTG	BKR RTG	CKT NO	LOAD
LTS	1	20	20	2	SPARE
EXH. FAN (1/4 HP)	3			4	DAMPER MOTOR
DAMPER MOTOR	5			6	LTS
LTS	7			8	LTS
RECPT'S	9			10	SPARE
RECPT'S	11			12	RECEPT'S
RECPT'S	13			14	
RECPT'S	15			16	SPARE
LTS	17			18	LTS
LTS	19			20	RECEPT'S
	21			22	RECEPT'S
	23			24	LTS & RECEPT.
LTS & RECPT.	25			26	MICROWAVE
DAMPER CONTROL	27			28	RECEPT'S
LTS	29			30	BUBBLER
LTS	31			32	
LTS	33		–	34	SPACE
SPARE	35	–	–	36	
SPARE	37	–	–	38	
POLYMER CONTROL PNL	39	30	30	40	POLYMER CONTROL PNL
	41	30	30	42	

SLUDGE THICKENER SHT. E-9 — TP

480 V., 3Φ, 3 W W/GND BUS 400 A MLO, SURFACE MTD

LOAD	CKT NO	BKR RTG	BKR RTG	CKT NO	LOAD
BELT PRESS	1	50	70	2	TRANSFORMER (PNL TL)
UNIT HTR (10 KW)	3	20	30	4	UNIT HTRS.
MONORAIL	5	30	30	6	UNIT HTRS. 3@6 KW EA.
SUMP PUMP CONTROL PANEL	7	20	50	8	WELDING OUTLETS
SPARE	9	20	30	10	UNIT HTRS. 4@4 KW EA.
UNIT HTRS. 4@4 KW EA.	11	30		12	UNIT HTRS. 3@6 KW EA.
BELT PRESS	13	50	50	14	WELDING OUTLET
UNIT HTR. (4 KW)	15	20	20	16	SPARE

RETURN SLUDGE PUMP STATION NO. 1 SHT. E-7 — SP

480 V., 3Φ, 3 W. W/GND. BUS 225 A. MLO SURFACE MTD.

LOAD	CKT NO	BKR RTG	BKR RTG	CKT NO	LOAD
CLARIFIER 1&2	1	30	20	2	UNIT HTR.
CLARIFIER 3	3	15	50	4	WELDER OUTLET
CLARIFIER 5	5	15	15	6	SUMP PUMP
PANEL SL	7	30			SPACE
SPACE					SPACE
SPACE					SPACE

RETURN SLUDGE PUMP STATION NO. 1 SHT. E-7 — SL

120/208 V., 3Φ, 4 W W/GND BUS 50/3 M.B. SURFACE MTD.

LOAD	CKT NO	BKR RTG	BKR RTG	CKT NO	LOAD
CLARIFIER 3&4 LTS.	1	20	20	2	RECPT.
ENTRANCE LTS.	3	20	20	4	SLUDGE METERS
PUMP ROOM LTS.	5	20	20	6	VARIABLE SPEED CONT.
POLE LT.	7	20	20	8	OUTSIDE LTS.
SPARE	9	20	20	10	RECPT.
POLE LTS.	11	20	20	12	SPARE
SPARE	13	20	20	14	
	15	20	20	16	
	17	20	20	18	

RECYCLE PUMP STATION SHT. E-8 — RL

120/208 V., 3Φ, 4 W. W/GND BUS 50/3 M.B. SURFACE MTD.

LOAD	CKT NO	BKR RTG	BKR RTG	CKT NO	LOAD
EXH. FAN	1	20	20	2	SLUDGE METERS
	3	20	20	4	OUTLETS ON COUNTER
	5	20	20	6	
ENTRANCE LTS.	7	20	20	8	PH ANALYZER
OUTSIDE LTS.	9	20	20	10	STAIR LTS.
SPARE	11	20	20	12	MOTOR FLOOR LTS.
	13	20	20	14	PUMP ROOM LTS.
	15	20	20	16	ENT. FLOOR RECPT.
	17	20	20	18	SPARE

MAINT. BLDG. SHT. E-12 — OLA

120/208V., 3Φ, 4 W. 225 A. MC.O. SURFACE MTD. W/ GND BUS

LOAD	CKT NO	BKR RTG	BKR RTG	CKT NO	LOAD
250 V SHOP RECPT.	1	30	20	2	120V. SHOP RECPT.
			20	4	
	3	30	20	6	LOADING RECPT.
			20	8	120V. SHOP RECPT.
	5	30	20	10	GARAGE RECPT.
			20	12	
	7	30	20	14	EF-1
			20	16	EF-2
	9	30	20	18	EF-3
			20	20	SPARE
ROLL UP DOORS	11	20	20	22	
			20	24	
			20	26	
ROLL UP DOORS	13	20	20	28	
			20	30	
			20	32	

MAINT. BLDG. SHT. E-12 — OL

120/208V., 3Φ, 4W. 150/3 M.B. SUB-FEED LUGS, SURFACE MTD. W/GND BUS

LOAD	CKT NO	BKR RTG	BKR RTG	CKT NO	LOAD
LTS	1	20	20	2	LTS
	3	20	20	4	
	5	20	20	6	
	7	20	20	8	
	9	20	20	10	ICE MACHINE
SPARE	11	20	20	12	WASHER
	13	20	20	14	RECPT.
	15	20	20	16	REFRIG.
	17	20	30	18	DRYER
	19	20	50	20	KITCHEN
	21	20			
RECPT-TRAINING	23		30	22	LOBBY HTR.
RECPT-TOILETS	25				
RECPT-LOBBY	27				
RECPT-OFFICES	29		20	24	SITE LTS.
RECPT-TELE.	31		20	26	

MAINT. BLDG. SHT. E-12 — DP

480V., 3Φ, 3W. W/GND. BUS 200/3 M.B. SURFACE MTD.

LOAD	CKT NO	BKR RTG	BKR RTG	CKT NO	LOAD
UNIT HTR.	1	20	30	2	WTR. HTR.
UNIT HTR.	3	20	50	4	ELECTRIC HEAT.
PANEL OL	5	70	30	6	HEAT PUMP
AIR COMPR.	7	30	30	8	CRANE
SPACE					SPACE

APPROVED
STATE OF GEORGIA
MAR 15 1984
WATER QUALITY CONTROL SECTION
ENVIRONMENTAL PROTECTION DIVISION
By Curtis C. Boswell Jr.

JACK C. DOZIER P.E.

GEORGIA REGISTERED PROFESSIONAL ENGINEER No. 5021 H. WIEDEMAN

EPA PROJECT NO. C130409

CITY OF BRUNSWICK, GEORGIA
SEWERAGE SYSTEM IMPROVEMENTS

SYMBOLS, LIGHTING FIXTURE AND PANEL SCHEDULES

SCALE NONE DATE JAN. 1984	WIEDEMAN AND SINGLETON ENGINEERS ATLANTA GEORGIA	SHEET E-4 OF 14

AF 10479A-B

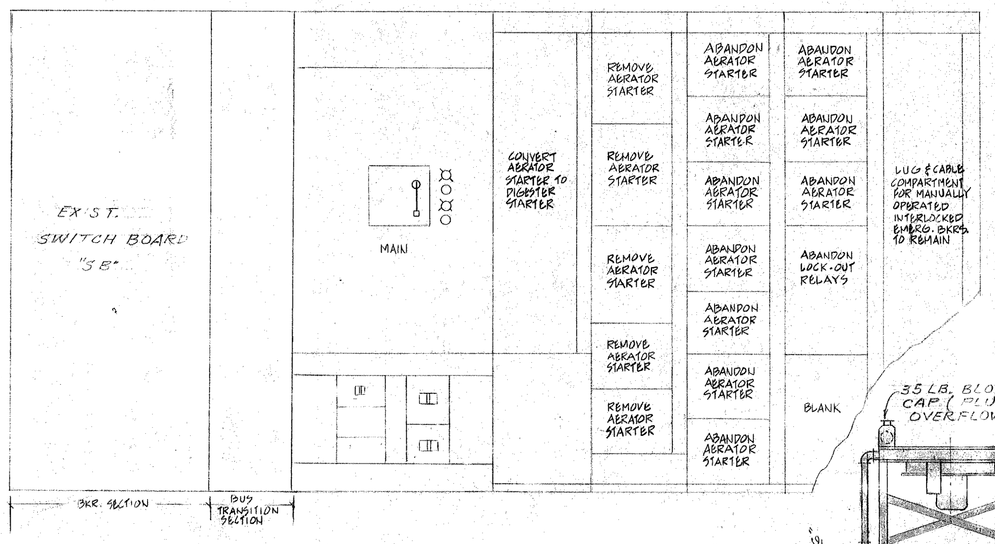

ELEVATION - EXIST. HEAD HOUSE SWITCHBOARD

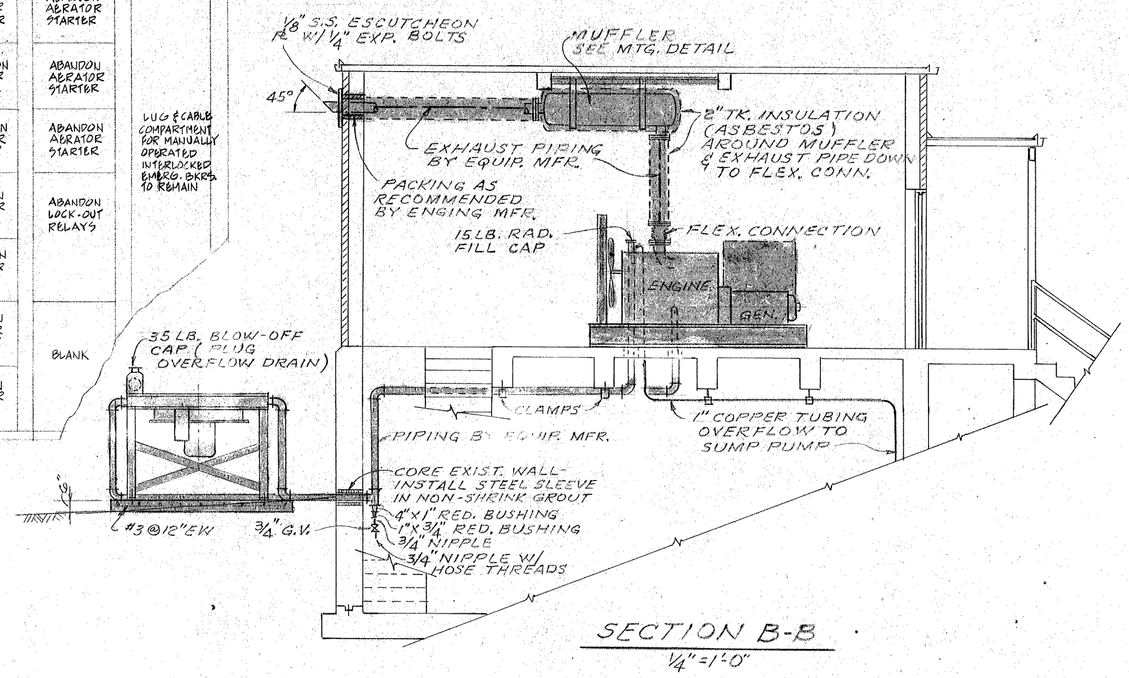

SECTION B-B
1/4" = 1'-0"

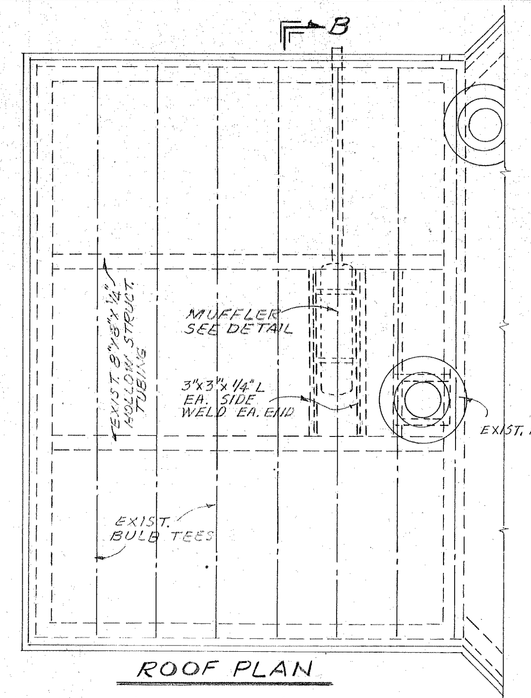

ROOF PLAN

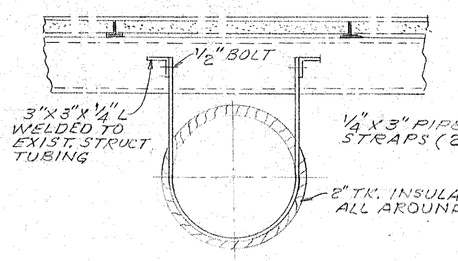

MUFFLER MOUNTING DETAIL
N.T.S.

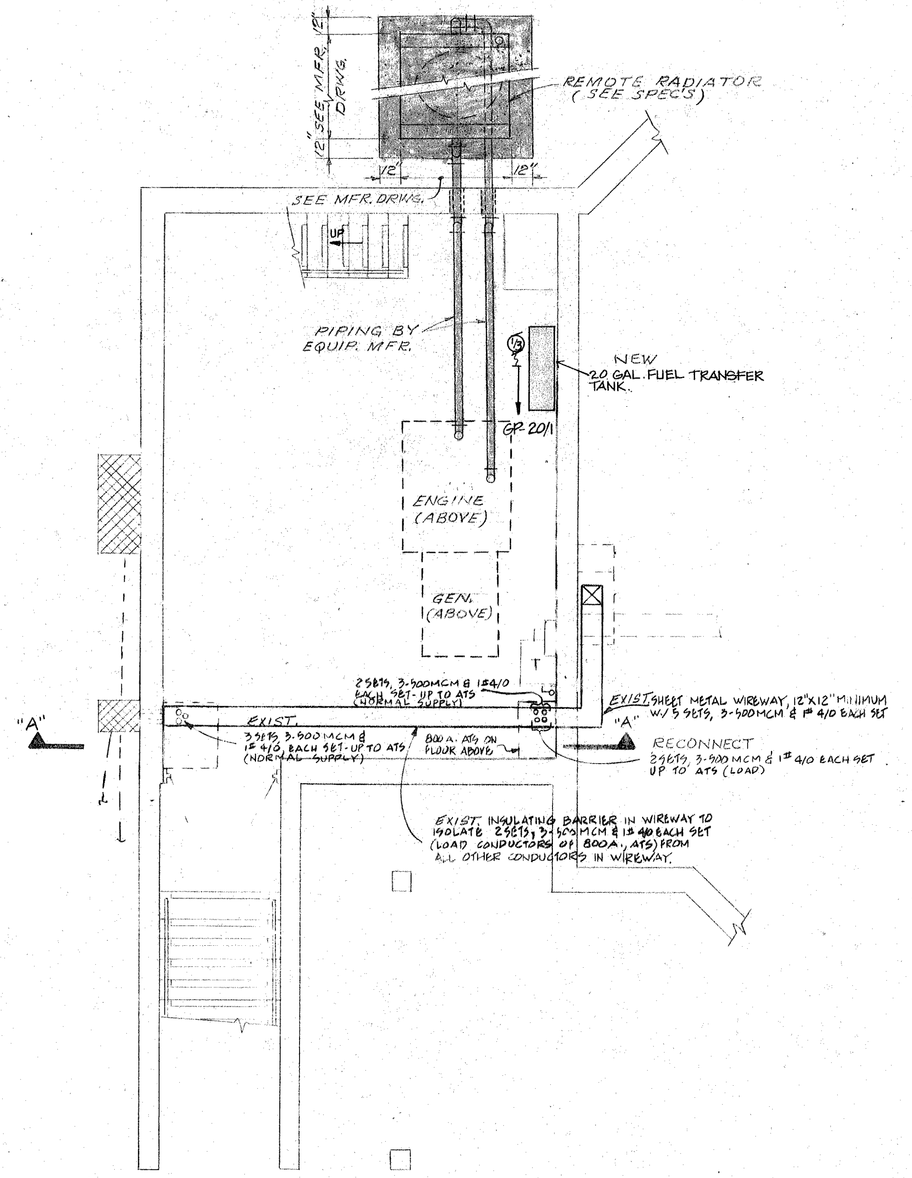

HEAD HOUSE
LOWER LEVEL FLOOR PLAN
1/4" = 1'-0"

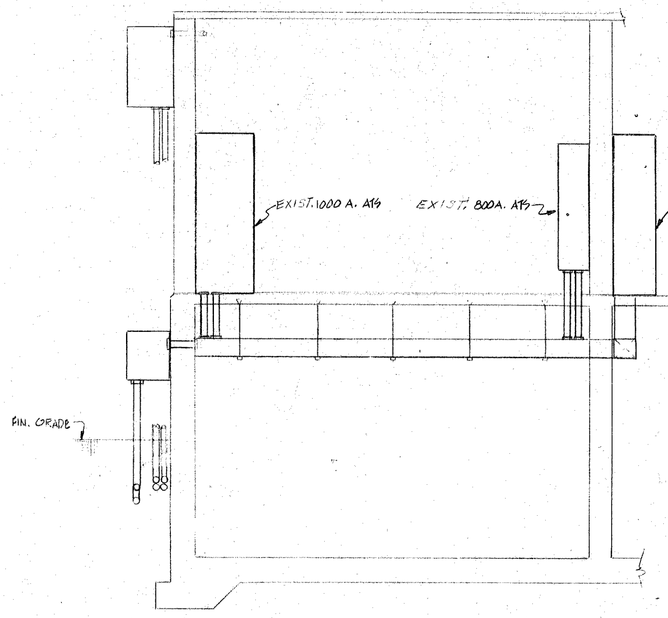

ELEVATION "A-A"
1/4" = 1'-0"

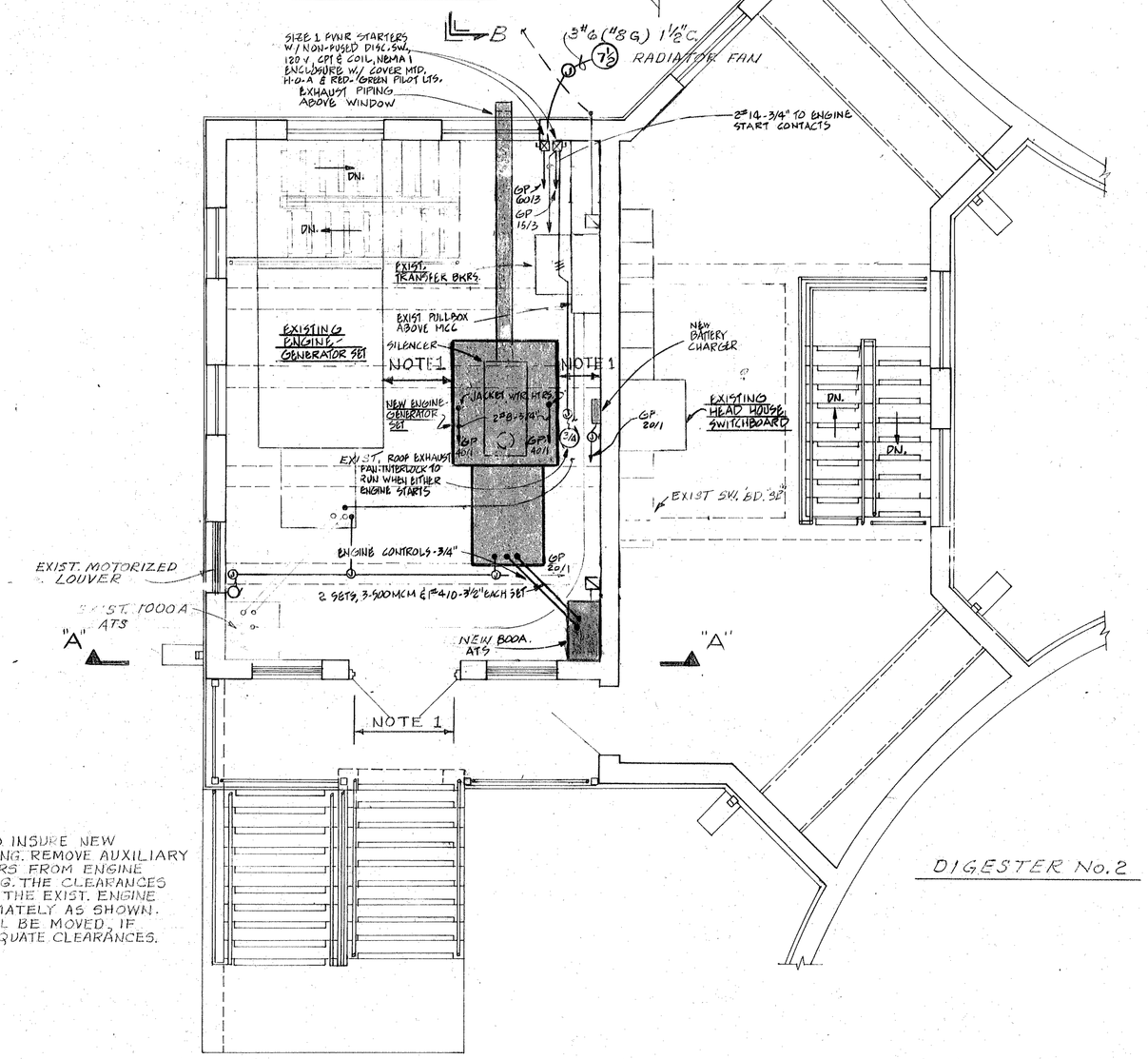

NOTES
1. VERIFY CLEARANCE AT DOOR TO INSURE NEW GENERATOR WILL CLEAR OPENING. REMOVE AUXILIARY DEVICES SUCH AS TURBOCHARGERS FROM ENGINE AS REQUIRED TO CLEAR OPENING. THE CLEARANCES BETWEEN THE NEW ENGINE, AND THE EXIST. ENGINE AND WALLS SHALL BE APPROXIMATELY AS SHOWN. THE EXISTING GENERATOR SHALL BE MOVED, IF NECESSARY TO MAINTAIN ADEQUATE CLEARANCES.

HEAD HOUSE
ENTRANCE FLOOR PLAN
1/4" = 1'-0"

N

APPROVED
STATE OF GEORGIA
MAR 15 1984
WATER QUALITY CONTROL SECTION
ENVIRONMENTAL PROTECTION DIVISION
By Curtis L. Bissell Jr.

GEORGIA REGISTERED No. 5021 PROFESSIONAL ENGINEER JOHN H. WIEDEMAN

JACK C. DOZIER P.E.

EPA PROJECT NO. C130409

CITY OF BRUNSWICK, GEORGIA
SEWERAGE SYSTEM IMPROVEMENTS

ACADEMY CREEK PLANT
MODIFICATIONS TO EXISTING HEADHOUSE AUXILIARY GENERATOR

SCALE	WIEDEMAN AND SINGLETON ENGINEERS	SHEET
N.T.S.		E-5
DATE	ATLANTA GEORGIA	OF 14
JAN. 1984		

42

172

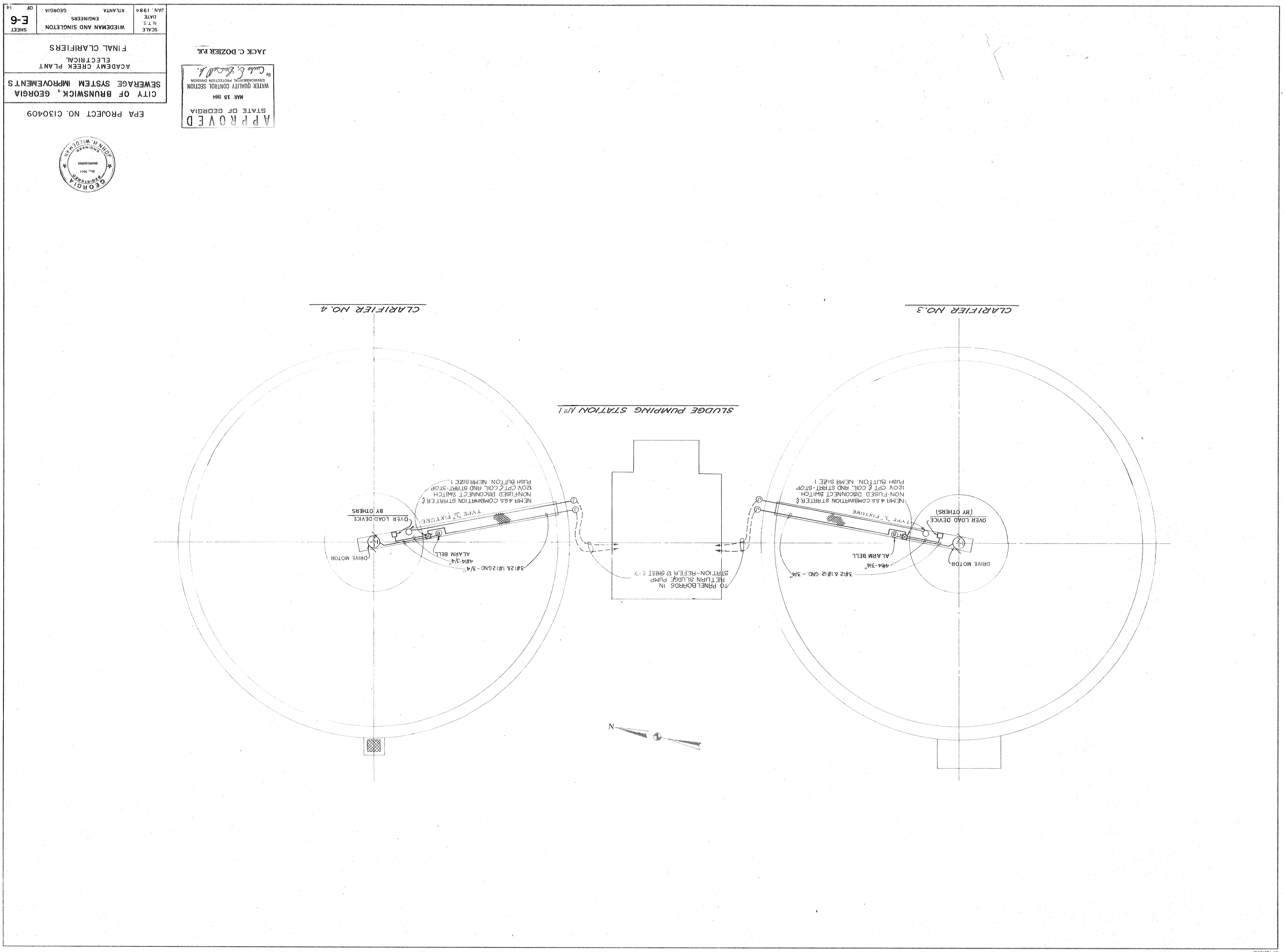

EPA PROJECT NO. C130409
CITY OF BRUNSWICK, GEORGIA
SEWERAGE SYSTEM IMPROVEMENTS
ACADEMY CREEK PLANT
ELECTRICAL
FINAL CLARIFIERS
SCALE N.T.S.
DATE JAN. 1984
WIEDEMAN AND SINGLETON ENGINEERS
ATLANTA GEORGIA
SHEET E-6 OF 14
APPROVED
STATE OF GEORGIA
MAR 15 1984
WATER QUALITY CONTROL SECTION
ENVIRONMENTAL PROTECTION DIVISION
By
JACK C. DOZIER P.E.
GEORGIA REGISTERED ENGINEER
JOHN H. WIEDEMAN
CLARIFIER NO. 4
CLARIFIER NO. 3
SLUDGE PUMPING STATION No. 1
TO PANELBOARDS IN RETURN SLUDGE PUMP STATION-REFER TO SHEET E-7
NEMA 4 S.S. COMBINATION STARTER & NON-FUSED DISCONNECT SWITCH. 120V. CPT & COIL AND START-STOP PUSH BUTTON. NEMA SIZE 1
TYPE "L" FIXTURE
OVER LOAD DEVICE (BY OTHERS)
DRIVE MOTOR
ALARM BELL
4#14-3/4"
3#12 & 1#12 GND. - 3/4"
N

AF 10479A+B

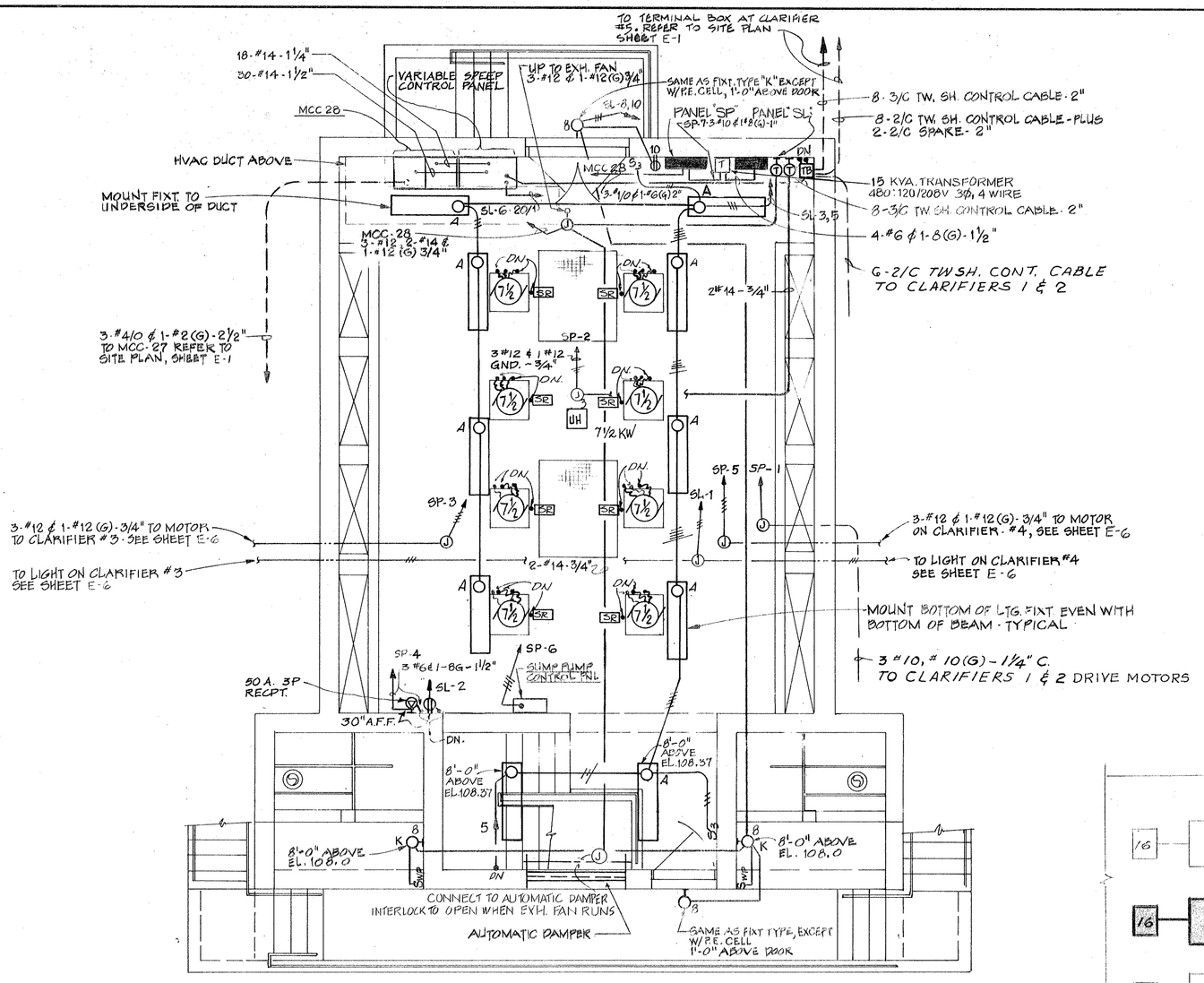

ENTRANCE FLOOR AND MOTOR ROOM PLAN

1/4" = 1'-0"

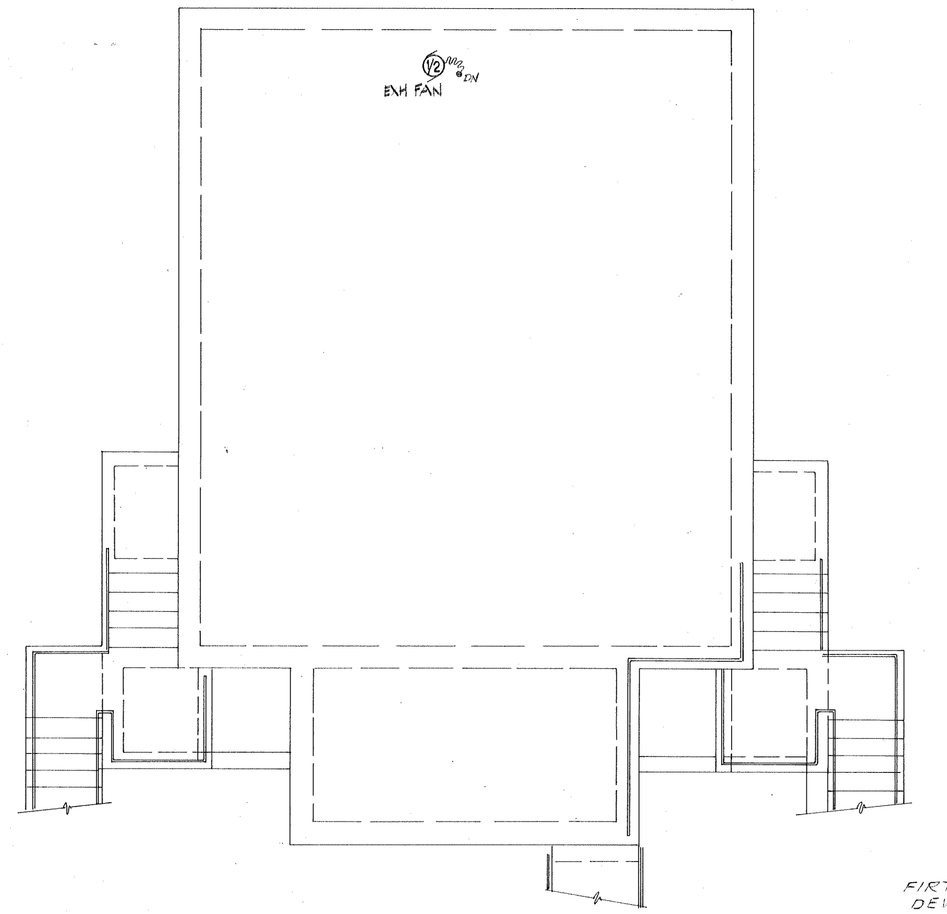

ROOF PLAN

SCALE 1/4 = 1'-0"

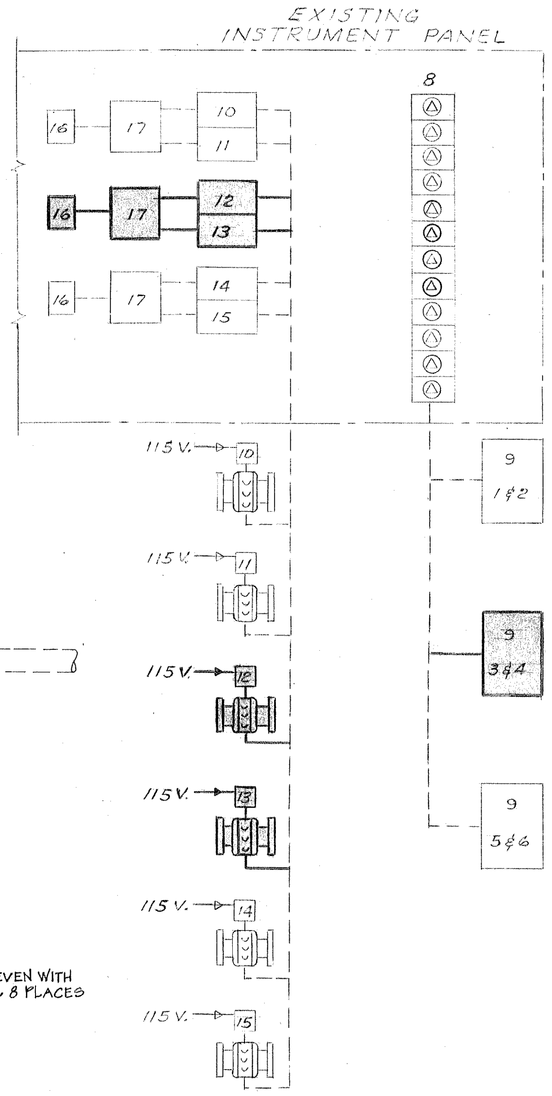

LEGEND

8 CLARIF. PUMP SPEED CONTROL
9 CLARIF. PUMP PANEL
12 RET. SLUDGE CLARIF. #3
13 " " " #4
16 " " TOTALIZER
17 " " SUMMATORS

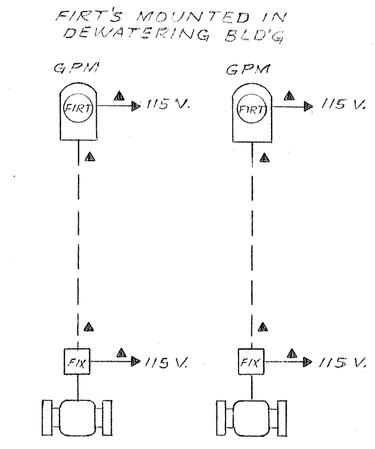

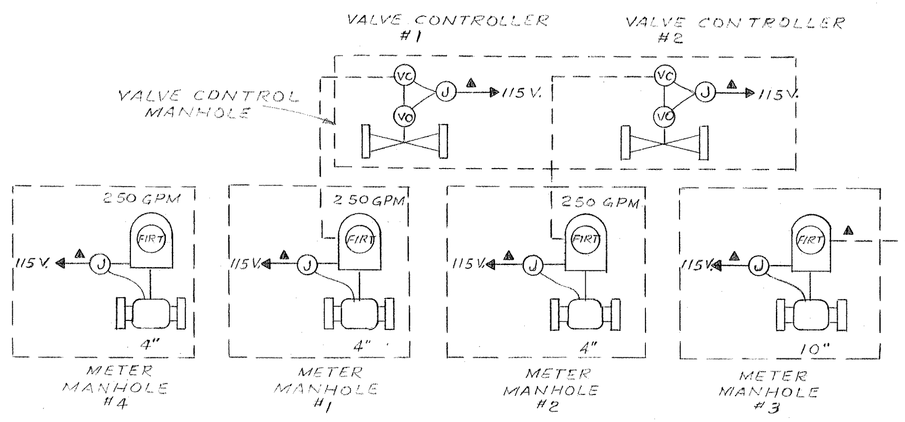

▲ LIGHTNING/SURGE PROTECTION

PLANT INSTRUMENTATION

N.T.S.

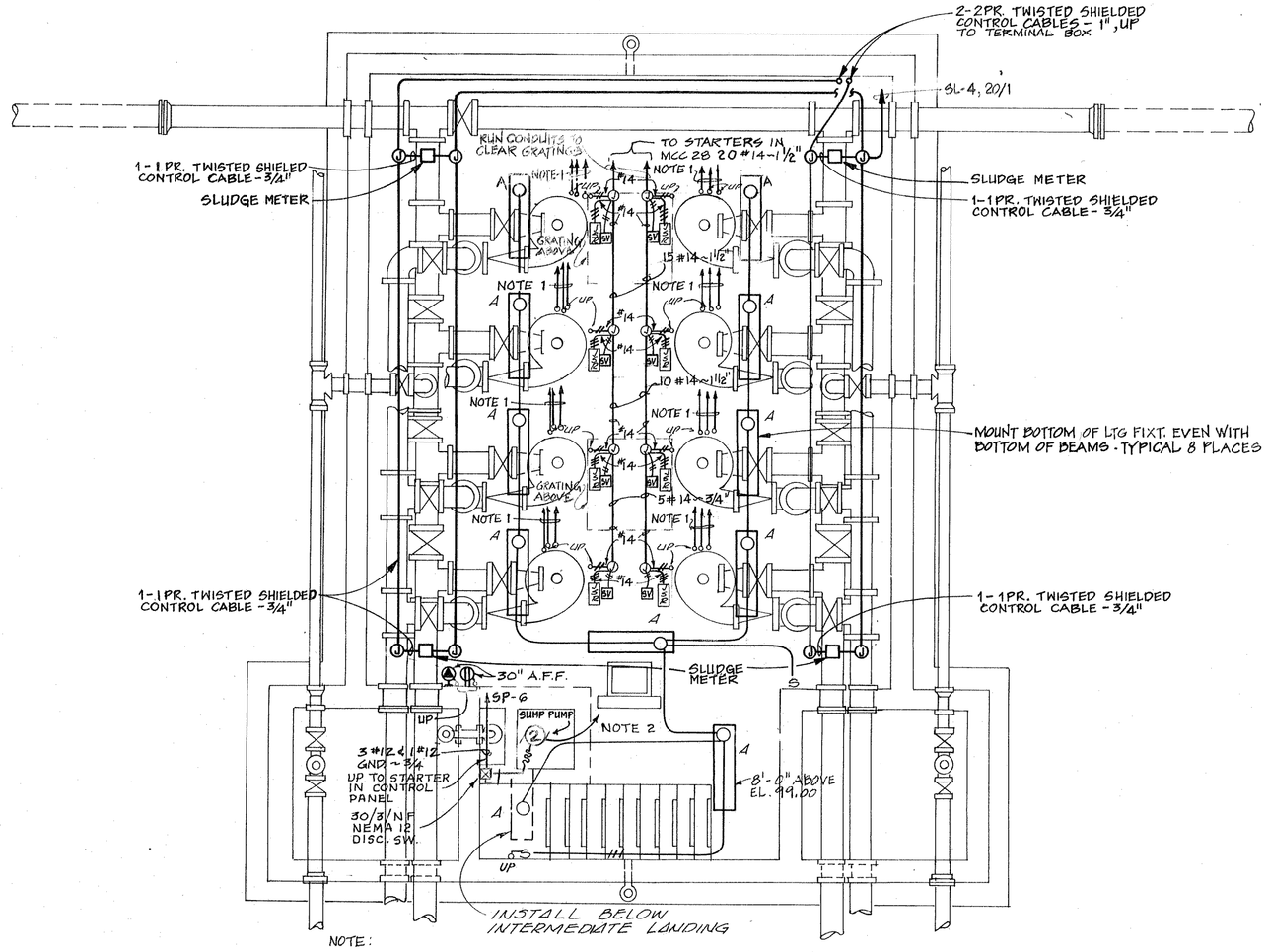

NOTE:

1. INSTALL 2 #12-¾" AND 2 #14 TWISTED SHIELDED CONTROL CABLE-¾" FROM EACH MAGNETIC DRIVE UNIT AT MOTOR TO VARIABLE SPEED CONTROL PANEL. INSTALL 3 #12 & 1 #12 GND.-¾" FROM EACH MOTOR TO CORRESPONDING STARTERS IN MCC 28
2. INSTALL LEVEL SWITCH CONTROL CABLE BETWEEN SUMP PUMP LOCATION & CONTROL PANEL. CABLE SHALL BE FURNISHED BY PUMP MFGR.

PUMP ROOM PLAN

1/2" = 1'-0"

GEORGIA REGISTERED No. 5021 PROFESSIONAL ENGINEER JACK C. DOZIER

APPROVED
STATE OF GEORGIA
MAR 15 1984
WATER QUALITY CONTROL SECTION
ENVIRONMENTAL PROTECTION DIVISION
By Curtis C. Bardell Jr.

JACK C. DOZIER P.E.

EPA PROJECT NO. C130409

CITY OF BRUNSWICK, GEORGIA
SEWERAGE SYSTEM IMPROVEMENTS

ACADEMY CREEK PLANT
ELECTRICAL
RETURN SLUDGE
PUMPING STATION NO. 1

SCALE	WIEDEMAN AND SINGLETON ENGINEERS	SHEET
1/4"=1'-0"		E-7
DATE	ATLANTA GEORGIA	OF 14
JAN. 1984		

AP 104794-B

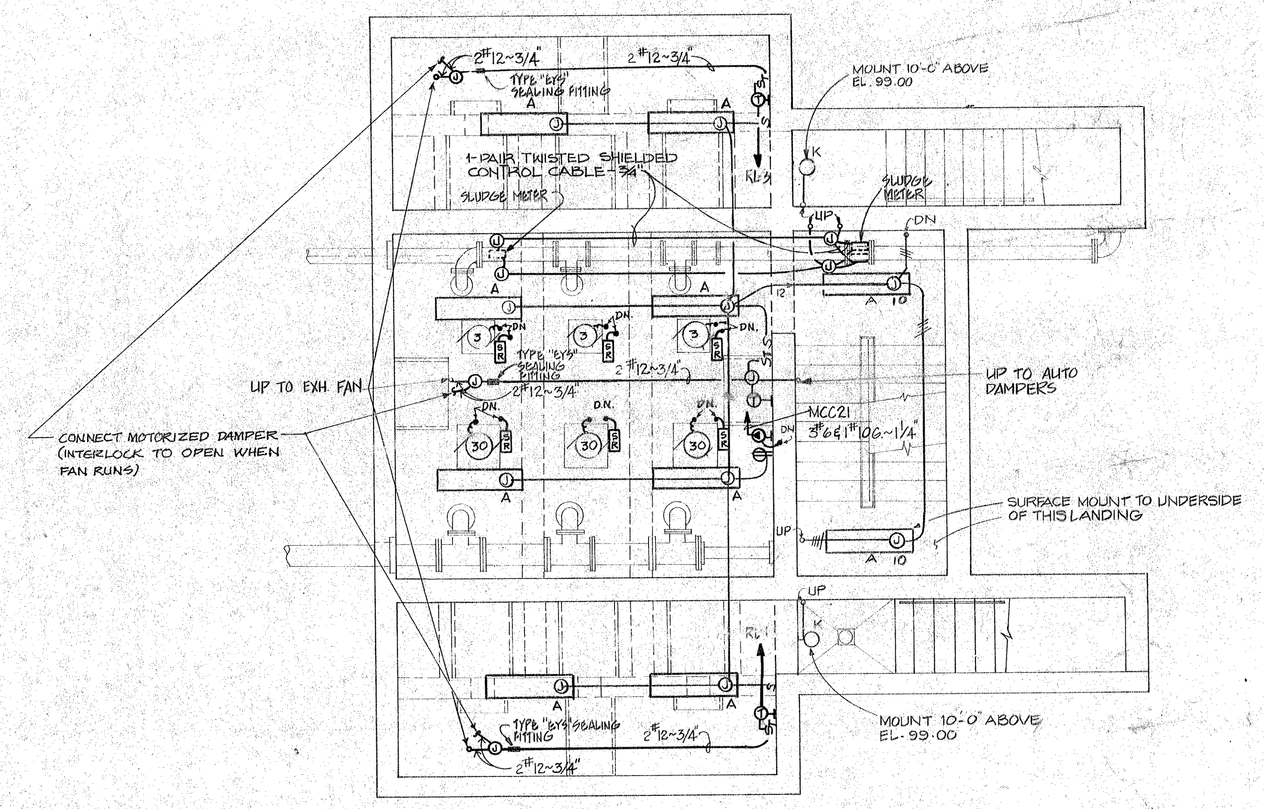

MOTOR FLOOR PLAN EL. 99.00

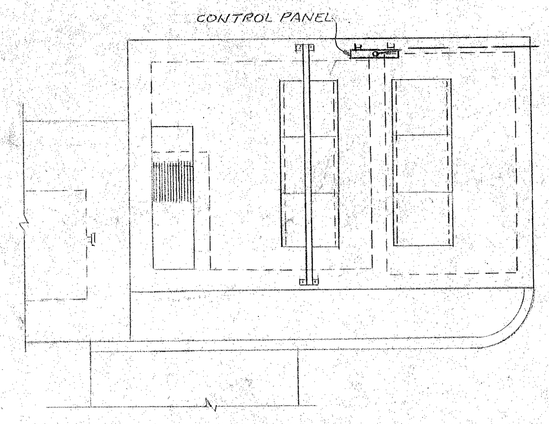

TOP PLAN

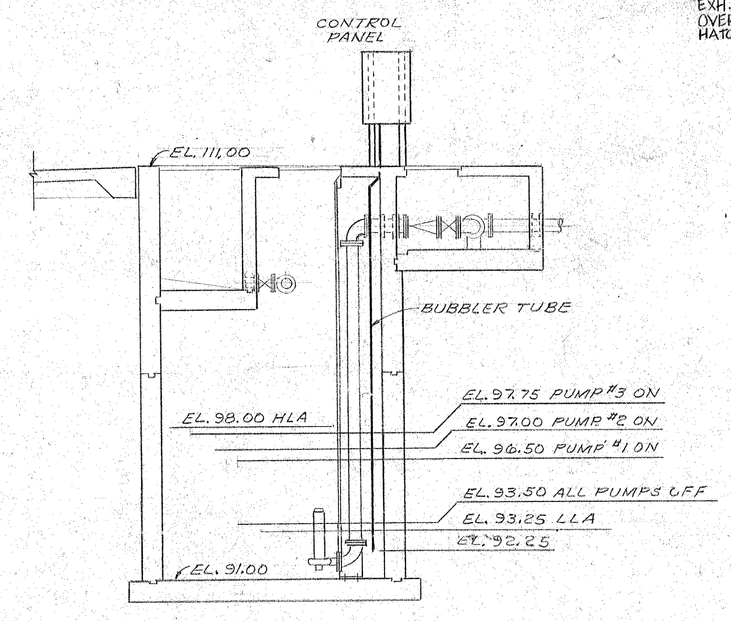

SECTION

SEPTIC WASTE DUMP STATION

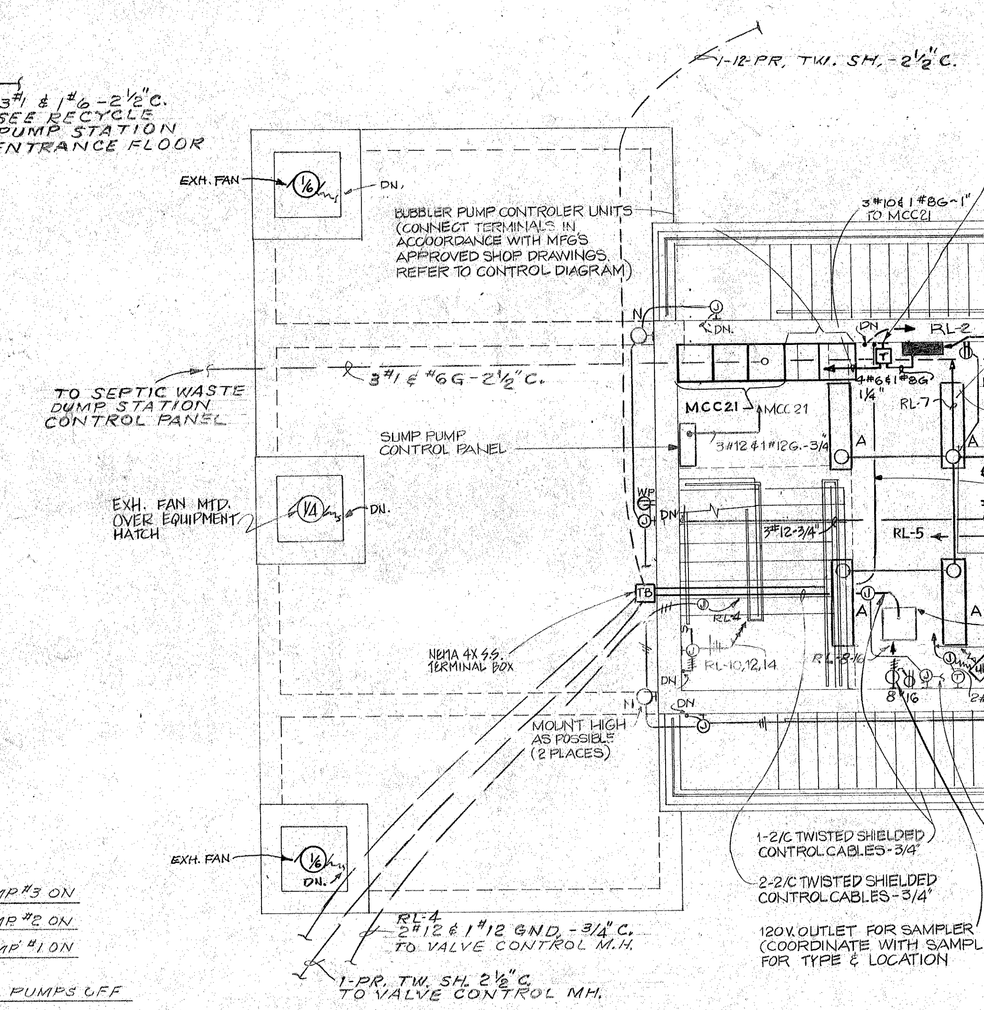

ENTRANCE FLOOR PLAN EL. 111.50

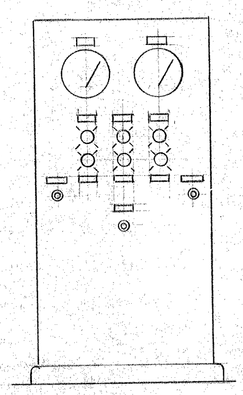

LEVEL CONTROL PANEL (TYP. 90"H x 24"W x 20"D)

N.T.S.

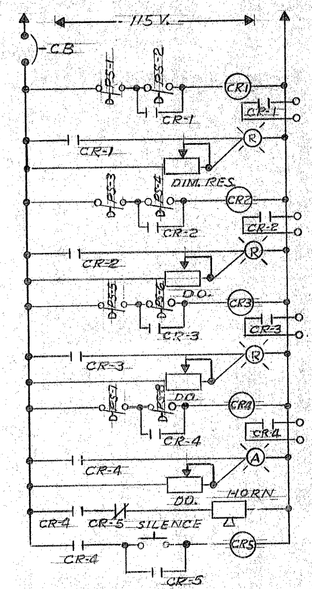

BUBBLER PANEL TYP. WIRING DIAGRAM

N.T.S.

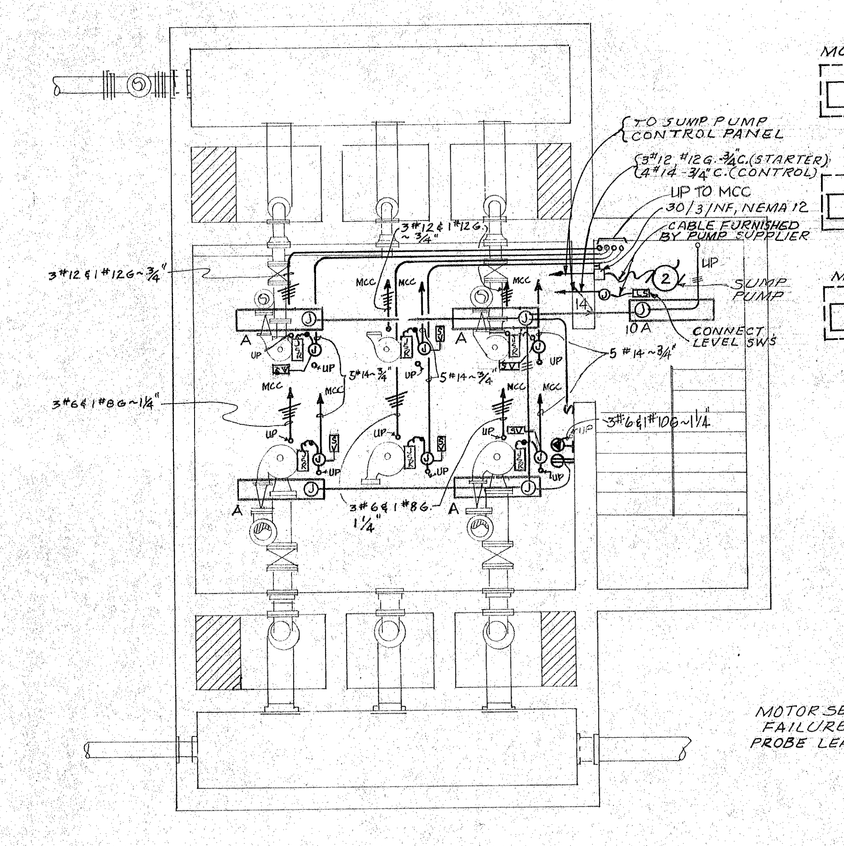

PUMP ROOM PLAN EL. 89.63

SEPTIC WASTE DUMP STATION PUMP CONTROLS

N.T.S.

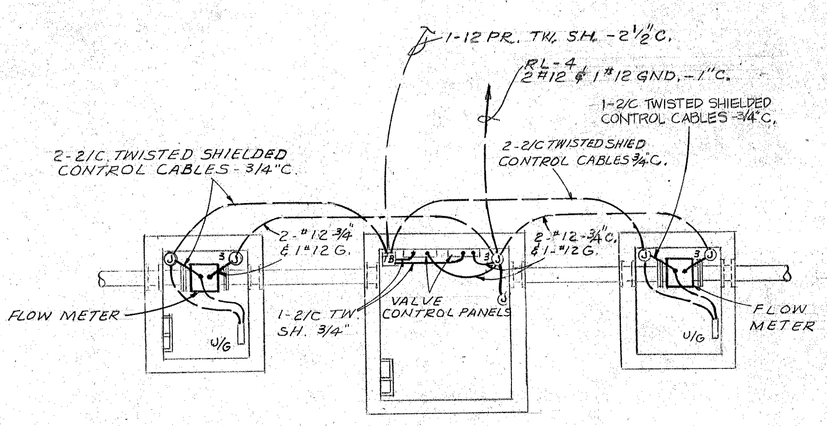

METER M.H. No.1 VALVE CONTROL M.H. METER M.H. No.2

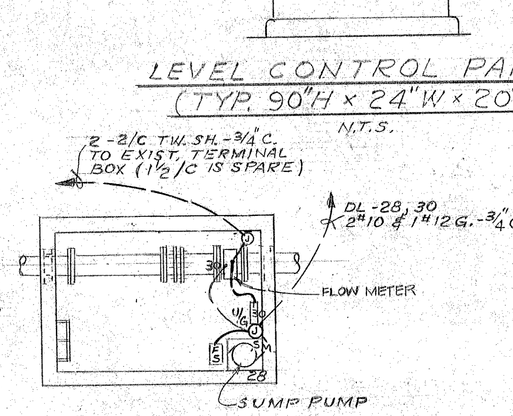

METER M.H. No.3

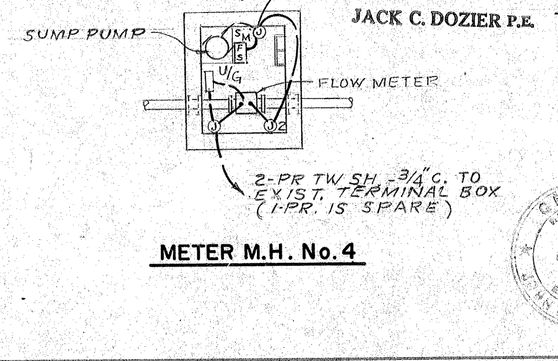

METER M.H. No.4

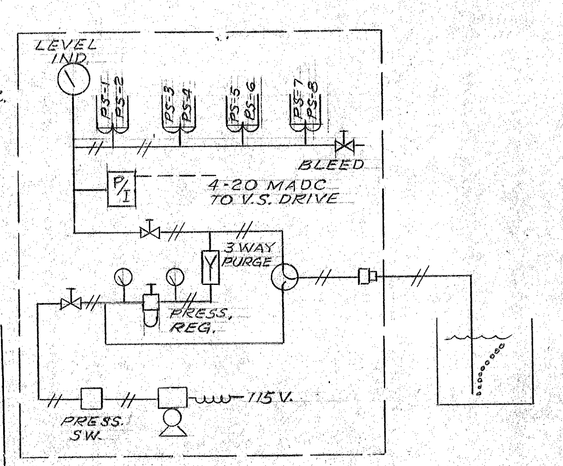

BUBBLER PANEL PNEUMATIC DIAG. (TYP.)

N.T.S.

APPROVED
STATE OF GEORGIA
MAR 15 1984
WATER QUALITY CONTROL SECTION
ENVIRONMENTAL PROTECTION DIVISION
BY Carlos L. Russell Jr.

JACK C. DOZIER P.E.

EPA PROJECT NO. C130409

CITY OF BRUNSWICK, GEORGIA
SEWERAGE SYSTEM IMPROVEMENTS
ACADEMY CREEK PLANT
ELECTRICAL
RECYLE PUMPING STATION
VALVE CONTROL & METER MANHOLES
SEPTIC WASTE DUMP STATION

SCALE	WIEDEMAN AND SINGLETON ENGINEERS	SHEET
1/4"=1'-0"		E-8
DATE	ATLANTA GEORGIA	OF 14
JAN. 1984		

AP 10479A-B

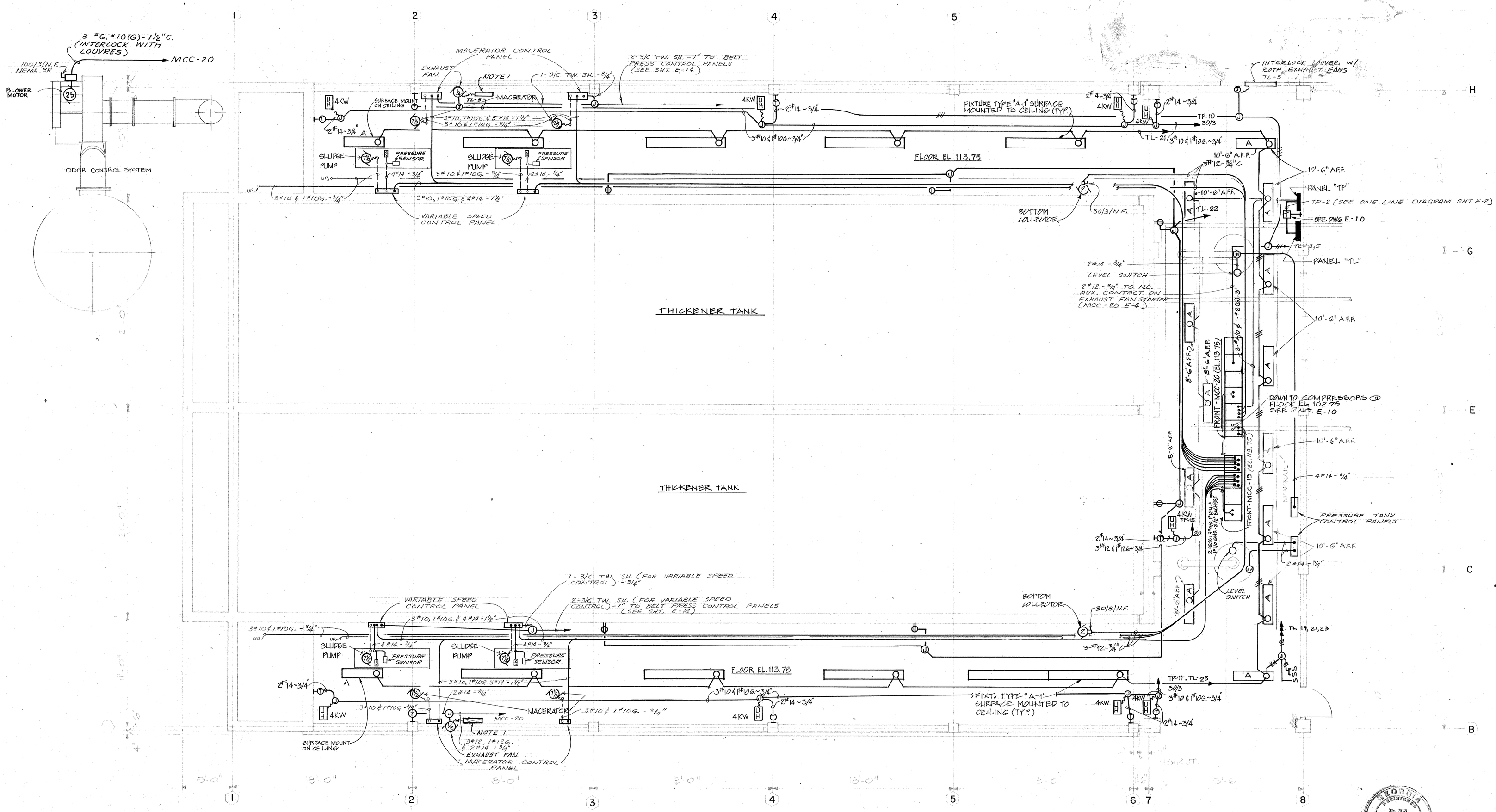

THICKENER TANK

THICKENER TANK

NOTE:
1. WALL MOUNTED 30/2/N.F. DISC. SWITCH AND NEMA SIZE 0, FVNR MAGNETIC STARTER. IN NEMA 12 ENCLOSURE, STARTER SHALL BE TWO POLE(W/ONE HEATER) W/ 115 VOLT COIL & COVER MTD. H.O.A. SELECTOR SWITCH.

PARTIAL GROUND FLOOR PLAN
1/4" = 1'-0"

APPROVED
STATE OF GEORGIA
MAR 15 1984
WATER QUALITY CONTROL SECTION
ENVIRONMENTAL PROTECTION DIVISION
By Curtis E. Burrell Jr.

JACK C. DOZIER P.E.

GEORGIA REGISTERED JACK C. DOZIER 10th 1984 PROFESSIONAL ENGINEER

EPA PROJECT NO. C130409

CITY OF BRUNSWICK, GEORGIA
SEWERAGE SYSTEM IMPROVEMENTS
ACADEMY CREEK PLANT
ELECTRICAL
FLOATATION THICKENER
PARTIAL GROUND FLOOR PLAN

SCALE	WIEDEMAN AND SINGLETON ENGINEERS	SHEET
1/4" = 1'-0"		E-9
DATE JAN. 1984	ATLANTA GEORGIA	OF 14

10

110

AF 1047BA-B

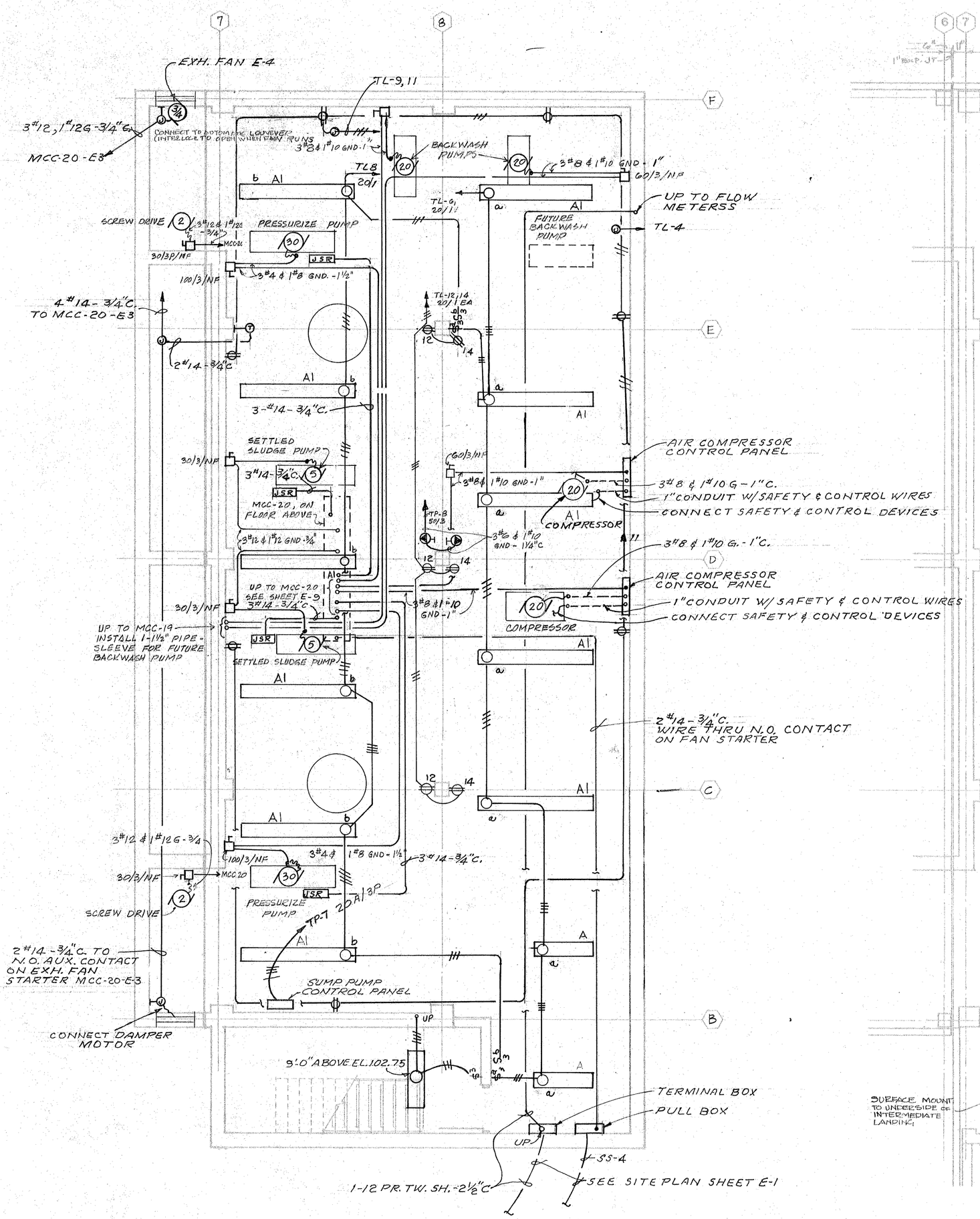

PARTIAL LOWER LEVEL FLOOR PLAN - THICKENER

1/4" = 1'-0"

NOTE: MOUNT ALL LIGHT FIXTURES, THIS LEVEL HIGH AS POSSIBLE, EXCEPT WHERE OTHERWISE NOTED.

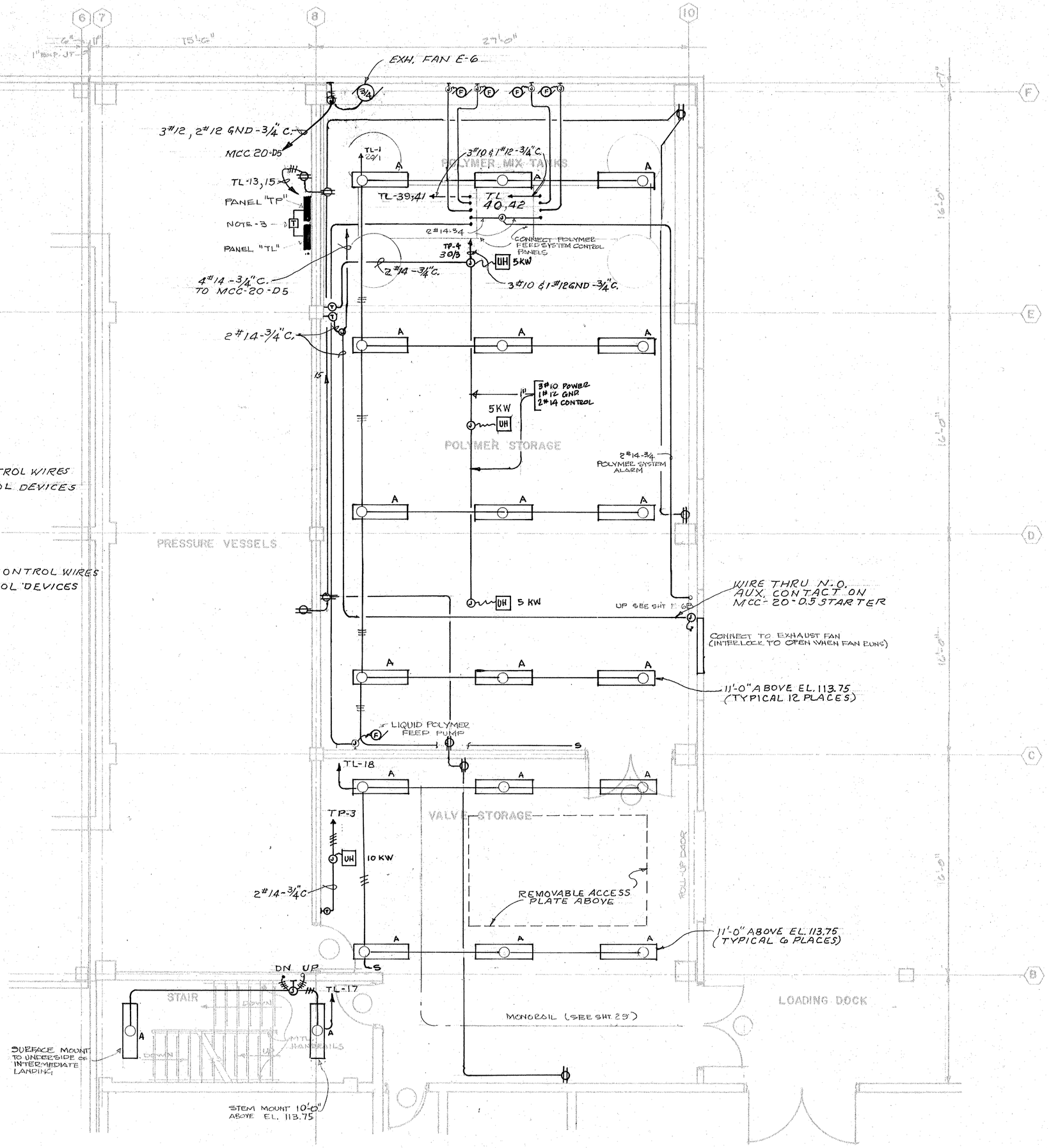

PARTIAL GROUND FLOOR PLAN-DEWATERING

1/4" = 1'-0"

NOTES:
1. STEM MOUNT ALL LIGHT FIXTURES EVEN WITH BOTTOM OF BEAMS
2. ALL ELECTRICAL REQUIREMENTS FOR POLYMER SYSTEM SHALL BE VERIFIED W/ EQUIP. SUPPLIERS' SHOP DRAWINGS.
3. 45 KVA, 480V/120/208V., 3φ TRANSFORMER
   PRIMARY = 3#4 & 1#6 (G) - 1½"
   SECONDARY = 4#1/0 & 1#6 (G) - 2½"

GEORGIA REGISTERED No. 3021 PROFESSIONAL ENGINEER JOHN N. WIEDEMAN

APPROVED
STATE OF GEORGIA
MAR 15 1984
WATER QUALITY CONTROL SECTION
ENVIRONMENTAL PROTECTION DIVISION
By Carlos E. Bardell Jr.

JACK C. DOZIER P.E.

EPA PROJECT NO. C130409

CITY OF BRUNSWICK, GEORGIA
SEWERAGE SYSTEM IMPROVEMENTS

ACADEMY CREEK PLANT
ELECTRICAL
DEWATERING-MAINTENANCE BUILDING
PARTIAL LOWER LEVEL PLANS

SCALE		SHEET
AS SHOWN	WIEDEMAN AND SINGLETON ENGINEERS	E-10
DATE		OF 14
JAN. 1984	ATLANTA GEORGIA	

AP 1067BA-B

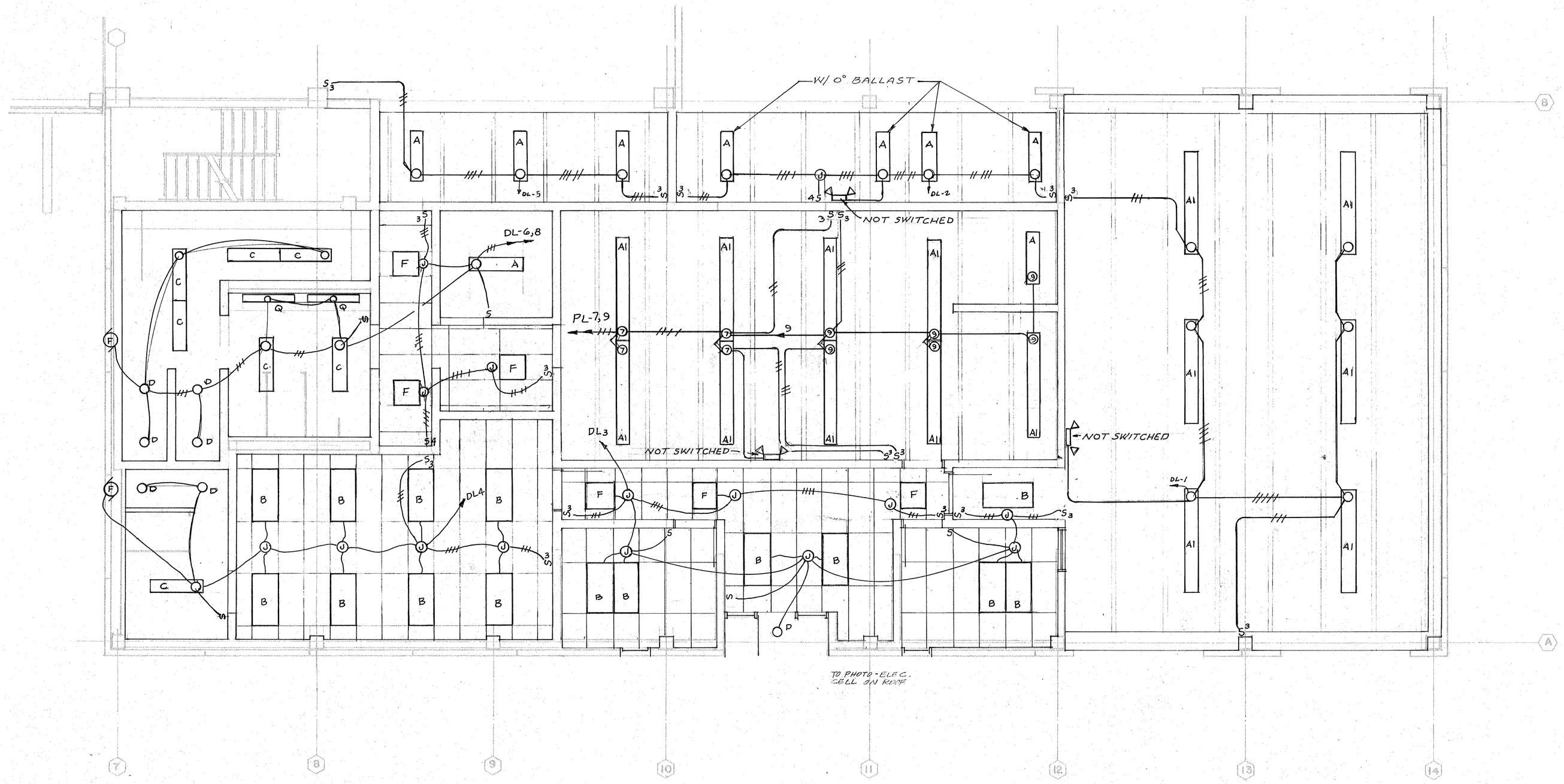

PANEL DP - 4-500 MCM - #2(G) - 3½"C
DL - 30 KVA 480 Δ 120/208 V 3φ 4W
4#2, #2(G) 1½"C
100 A MAIN

REFLECTED CEILING PLAN
1/4"=1'-0"

GEORGIA REGISTERED No. 5931 PROFESSIONAL ENGINEER

APPROVED
STATE OF GEORGIA
MAR 15 1984
WATER QUALITY CONTROL SECTION
ENVIRONMENTAL PROTECTION DIVISION
By Charles E. Bassell Jr.

JACK C. DOZIER P.E.

EPA PROJECT NO. C130409

CITY OF BRUNSWICK, GEORGIA
SEWERAGE SYSTEM IMPROVEMENTS

ACADEMY CREEK PLANT
ELECTRICAL
MAINTENANCE BUILDING
GROUND FLOOR PLAN

SCALE	WIEDEMAN AND SINGLETON ENGINEERS	SHEET
AS SHOWN		E-11
DATE	ATLANTA GEORGIA	OF 14
JAN. 1984		

AP 1047BA-B

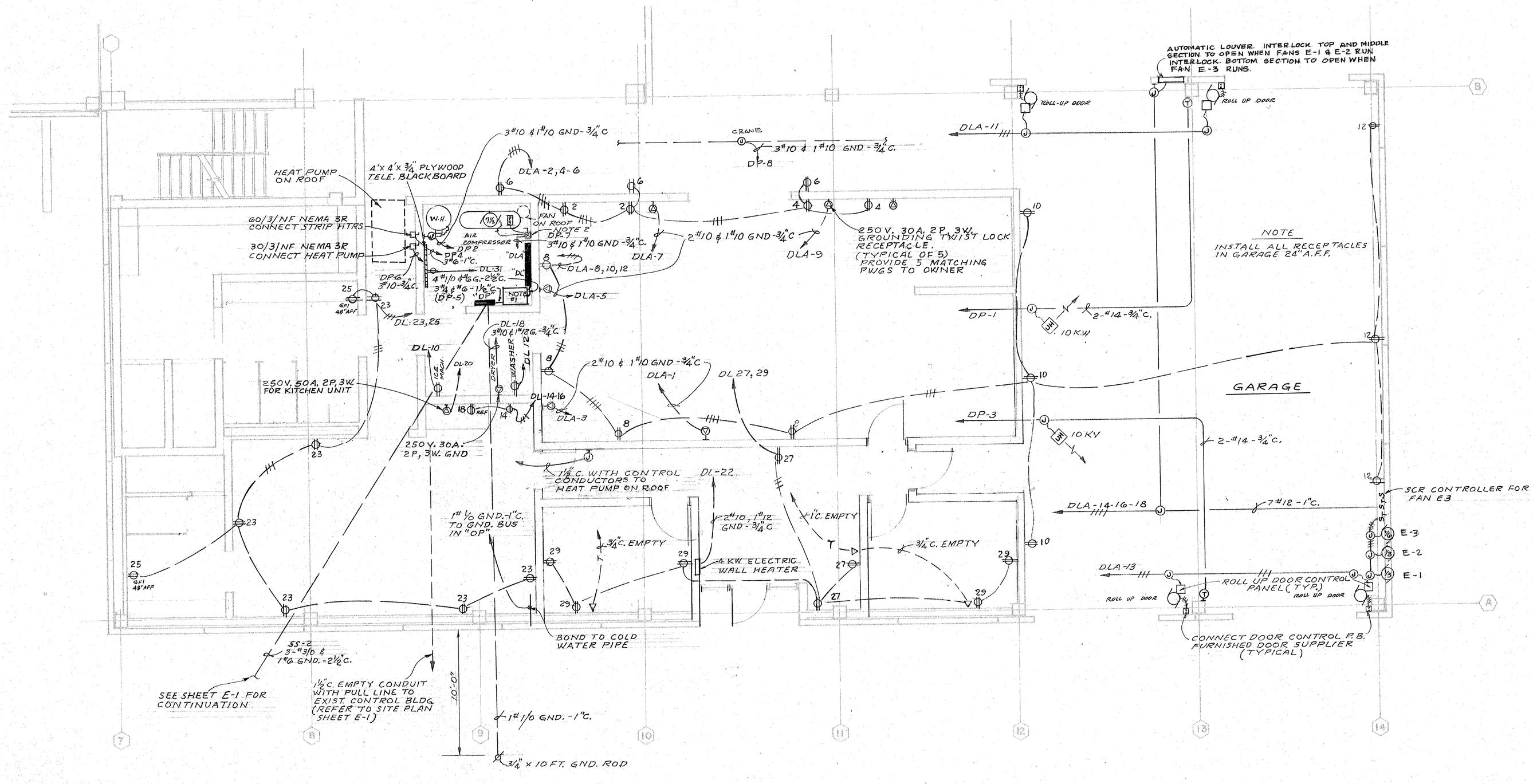

NOTE 1. LTG. TRANSFOMER
45 KVA, 480:120/208 V., 3 Ø, 4 W.
INSTALL ON ABOVE FLOOR & CONNECT WITH FLEXIBLE CONDUIT.

2. COMBINATION NON-FUSED DISCONNECT & MAGNETIC STARTER IN NEMA-12 ENCLOSURE. 120 CPT AND CO.L. COVER MTD. H.O.A. SW. CONNECT PRESSURE SW'S ON COMPRESSOR.

3. ALL RACEWAYS SHALL CONTAIN A GROUNDING CONDUCTOR.

FLOOR PLAN

GEORGIA REGISTERED No. 5021 PROFESSIONAL ENGINEER JOHN H. WIEDEMAN

EPA PROJECT NO. C130409

APPROVED
STATE OF GEORGIA
MAR 15 1984
WATER QUALITY CONTROL SECTION
ENVIRONMENTAL PROTECTION DIVISION
By Curtis L. Bassell Jr.

JACK C. DOZIER P.E.

CITY OF BRUNSWICK, GEORGIA
SEWERAGE SYSTEM IMPROVEMENTS

ACADEMY CREEK PLANT
ELECTRICAL
MAINTENANCE BUILDING
GROUND FLOOR PLAN

SCALE		SHEET
AS SHOWN	WIEDEMAN AND SINGLETON ENGINEERS	E-12
DATE		OF 14
JAN. 1984	ATLANTA GEORGIA	

AF 10479A-B

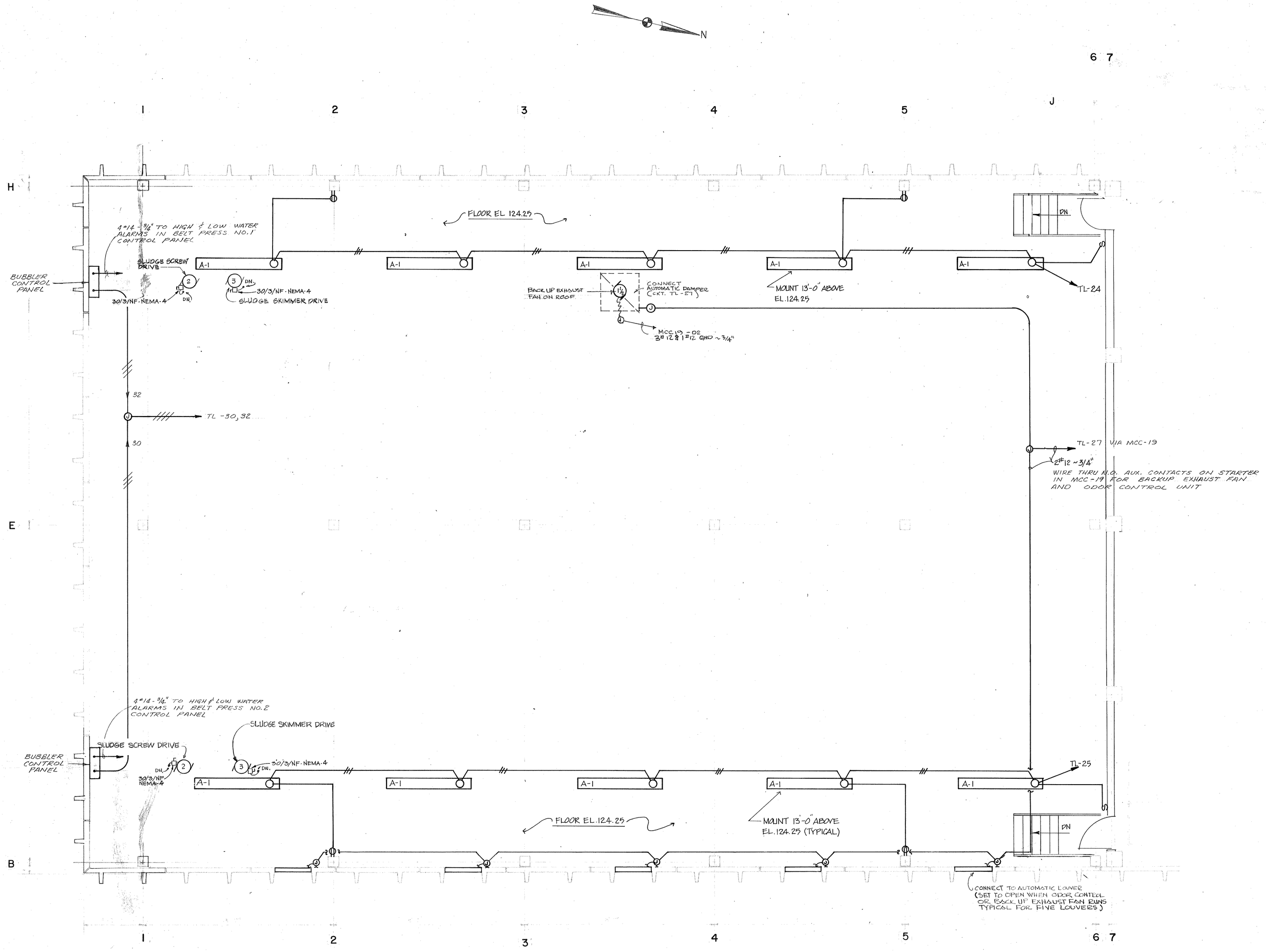

PARTIAL SECOND FLOOR PLAN
1/4" = 1'-0"

GEORGIA REGISTERED No. 5021 PROFESSIONAL ENGINEER JACK F. WIEDEMAN

APPROVED
STATE OF GEORGIA
MAR 15 1984
WATER QUALITY CONTROL SECTION
ENVIRONMENTAL PROTECTION DIVISION
By Curtis L. Bagwell Jr.

JACK C. DOZIER P.E.

EPA PROJECT NO. C130409

CITY OF BRUNSWICK, GEORGIA
SEWERAGE SYSTEM IMPROVEMENTS

ACADEMY CREEK PLANT
ELECTRICAL
FLOATATION THICKENER
PARTIAL SECOND FLOOR PLAN

SCALE	WIEDEMAN AND SINGLETON ENGINEERS	SHEET
1/4"=1'-0"		E-13
DATE	ATLANTA GEORGIA	OF 14
JAN. 1984		

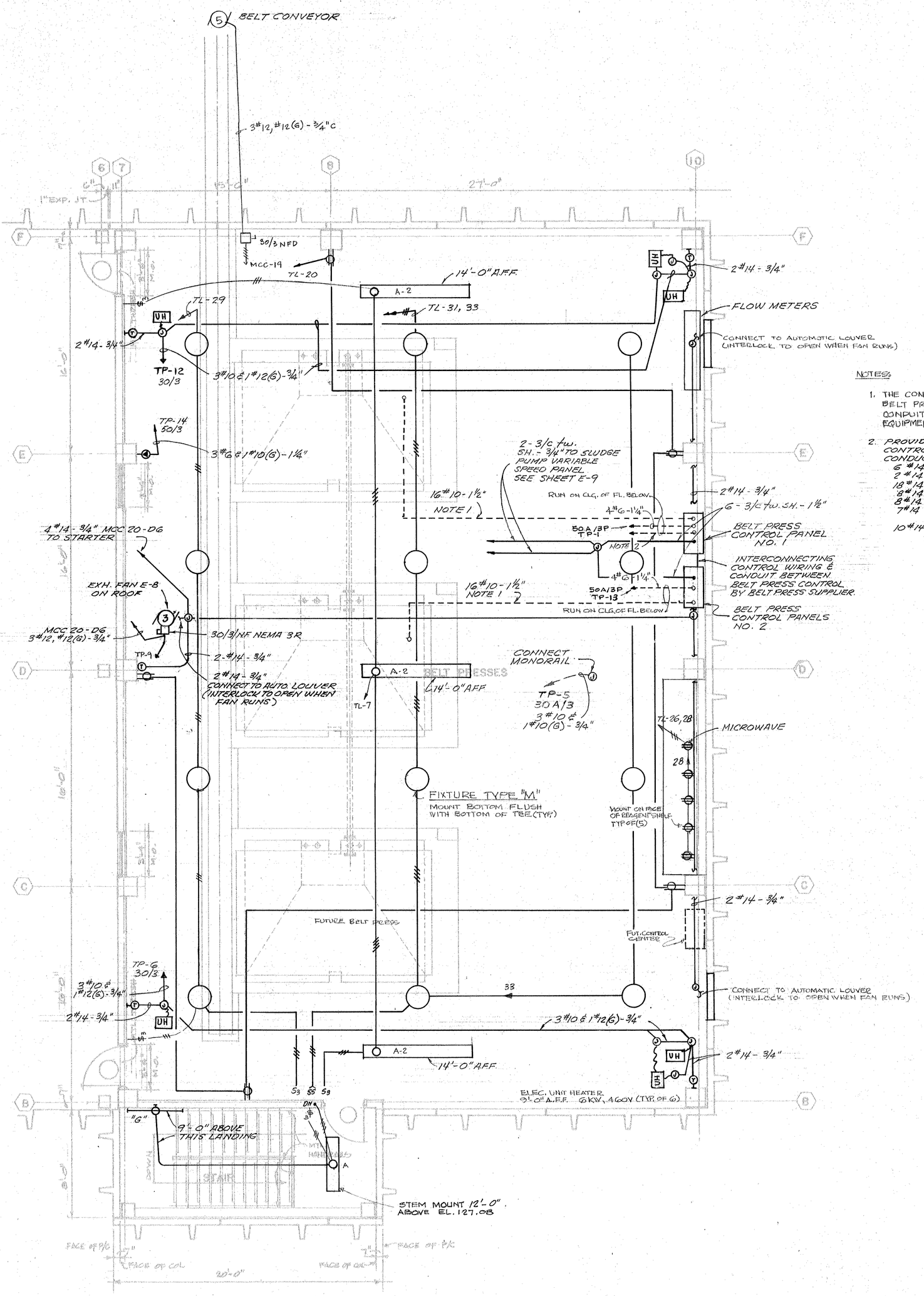

PARTIAL PLAN-DEWATERING
1/4" = 1'-0"

NOTES:

1. THE CONTRACTOR SHALL COORDINATE WITH THE BELT PRESS SUPPLIER FOR ALL NECESSARY CONDUCTORS & CONDUIT REQUIRED TO CONTROL REMOTE SERVICE EQUIPMENT FROM BELT PRESS CONTROL PANELS.
2. PROVIDE A 3 1/2" CONDUIT BETWEEN THE BELT PRESS CONTROL PANELS AND MCC 19 FOR CONTROL CONDUCTORS. CONDUCTORS SHALL BE AS FOLLOWS:
   - 6 #14 - BACKWASH PUMP S.S. PUSHBUTTONS
   - 2 #14 - BELT CONVEYOR INTERLOCK
   - 18 #14 - SLUDGE FEED PUMP & MACERATOR S.S. BUTTONS
   - 8 #14 - MACERATOR ALARMS
   - 8 #14 - LOW PRESSURE ALARM
   - 7 #14 - RED RUN LTS FOR 2 BACKWASH PUMPS AND 4 SLUDGE FEED PUMPS.
   - 10 #14 - SPARE

GEORGIA REGISTERED No. 5921 PROFESSIONAL ENGINEER JOHN H. WIEDEMAN

APPROVED
STATE OF GEORGIA
MAR 15 1984
WATER QUALITY CONTROL SECTION
ENVIRONMENTAL PROTECTION DIVISION
By Curtis E. Bassell Jr.

JACK C. DOZIER P.E.

EPA PROJECT NO. C130409

CITY OF BRUNSWICK, GEORGIA
SEWERAGE SYSTEM IMPROVEMENTS

ACADEMY CREEK PLANT
ELECTRICAL
DEWATERING-MAINTENANCE BUILDING
PARTIAL SECOND FLOOR PLAN

SCALE	WIEDEMAN AND SINGLETON ENGINEERS	SHEET
AS SHOWN		E-14
DATE JAN. 1984	ATLANTA GEORGIA	OF 14

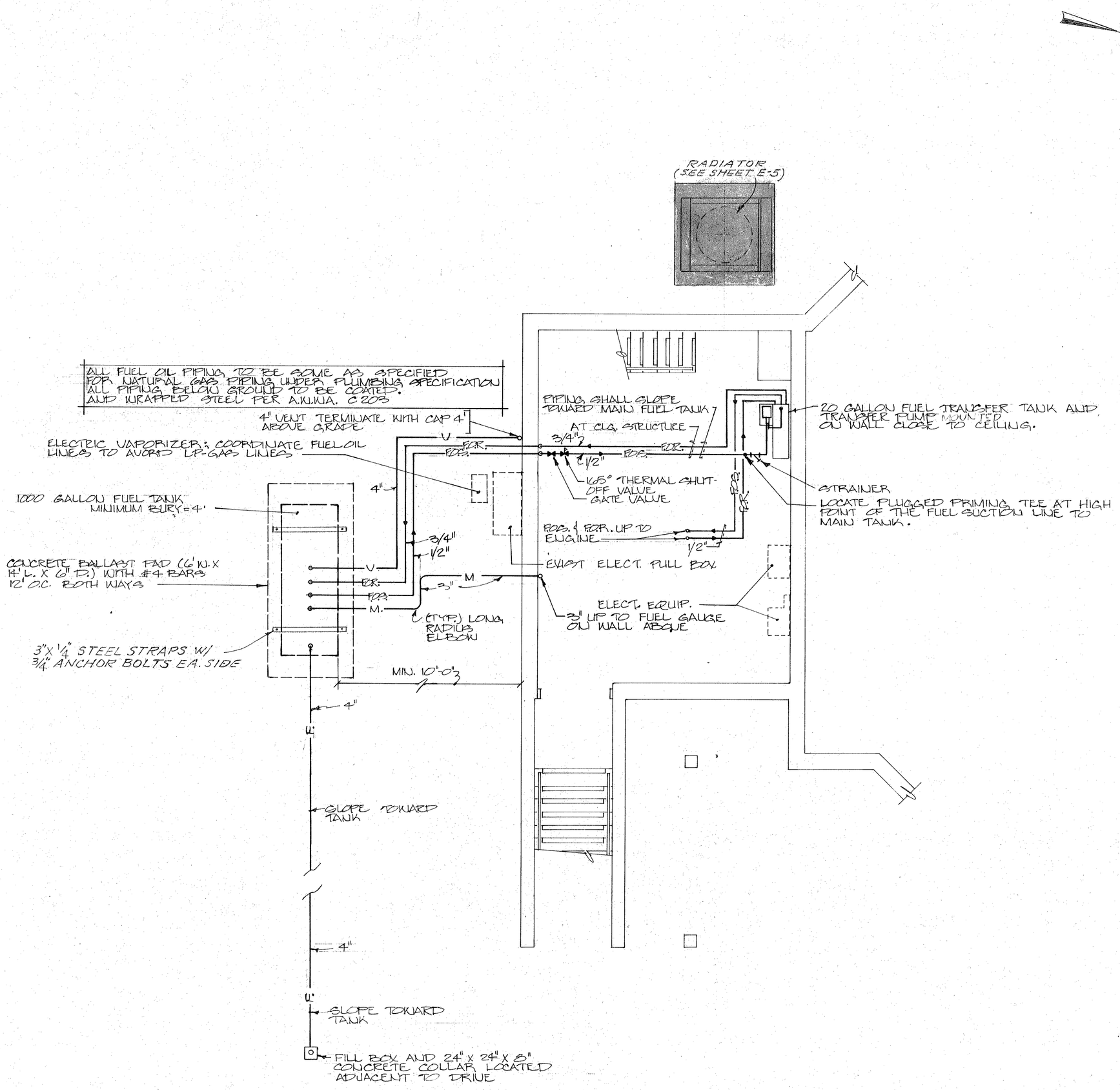

HEAD HOUSE LOWER LEVEL FLOOR PLAN
1/4" = 1'-0"

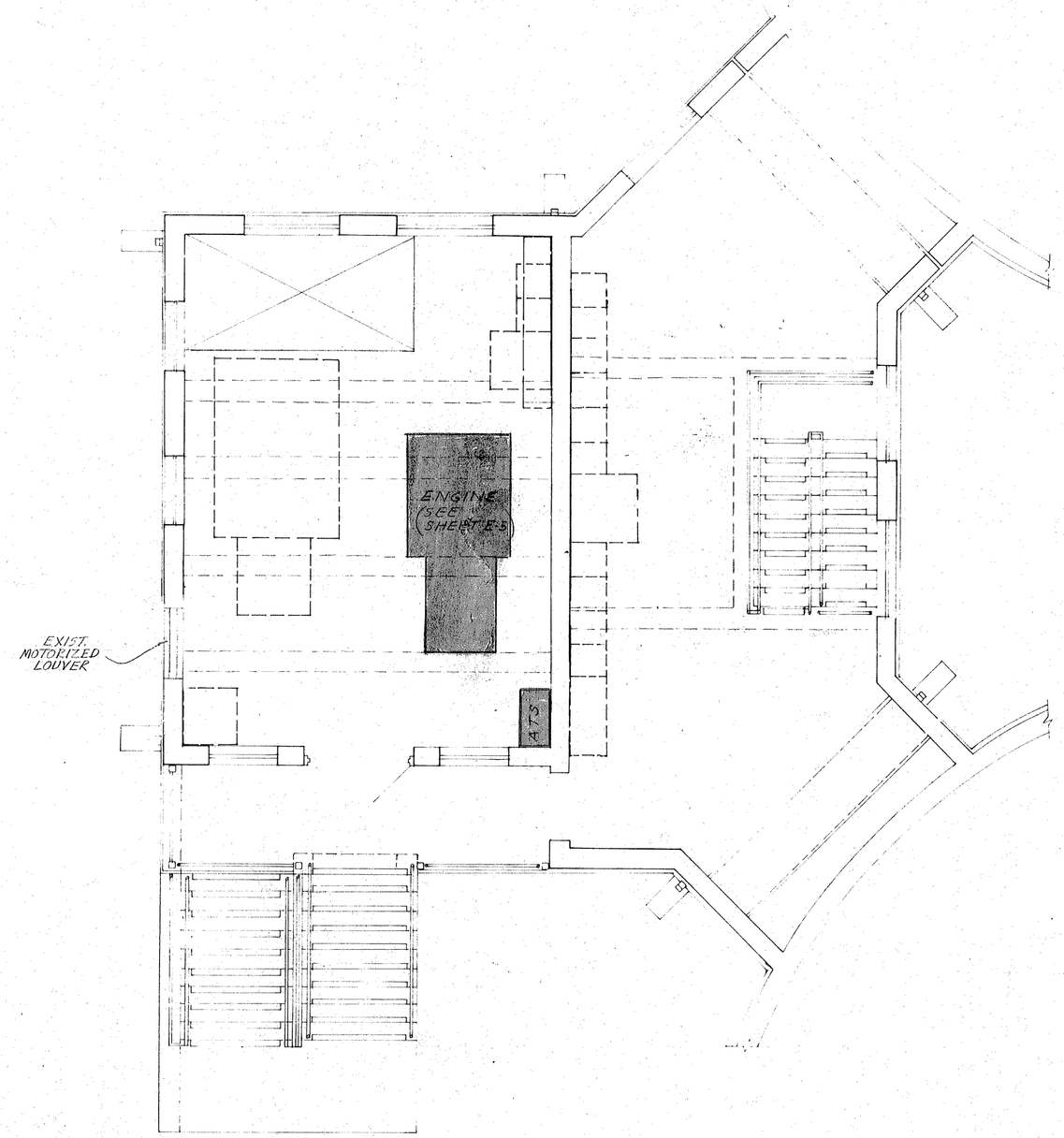

HEAD HOUSE
ENTRANCE FLOOR PLAN
1/4" = 1'-0"

APPROVED
STATE OF GEORGIA
MAR 15 1984
WATER QUALITY CONTROL SECTION
ENVIRONMENTAL PROTECTION DIVISION
By Curtis E. Bassell Jr.
JACK C. DOZIER P.E.

EPA PROJECT NO. C130409

CITY OF BRUNSWICK, GEORGIA
SEWERAGE SYSTEM IMPROVEMENTS

ACADEMY CREEK PLANT
MODIFICATIONS TO EXISTING HEADHOUSE AUXILIARY GENERATOR

SCALE N.T.S.	WIEDEMAN AND SINGLETON ENGINEERS	SHEET M-1
DATE JAN. 1984	ATLANTA GEORGIA	OF 9

AF 10678A-B

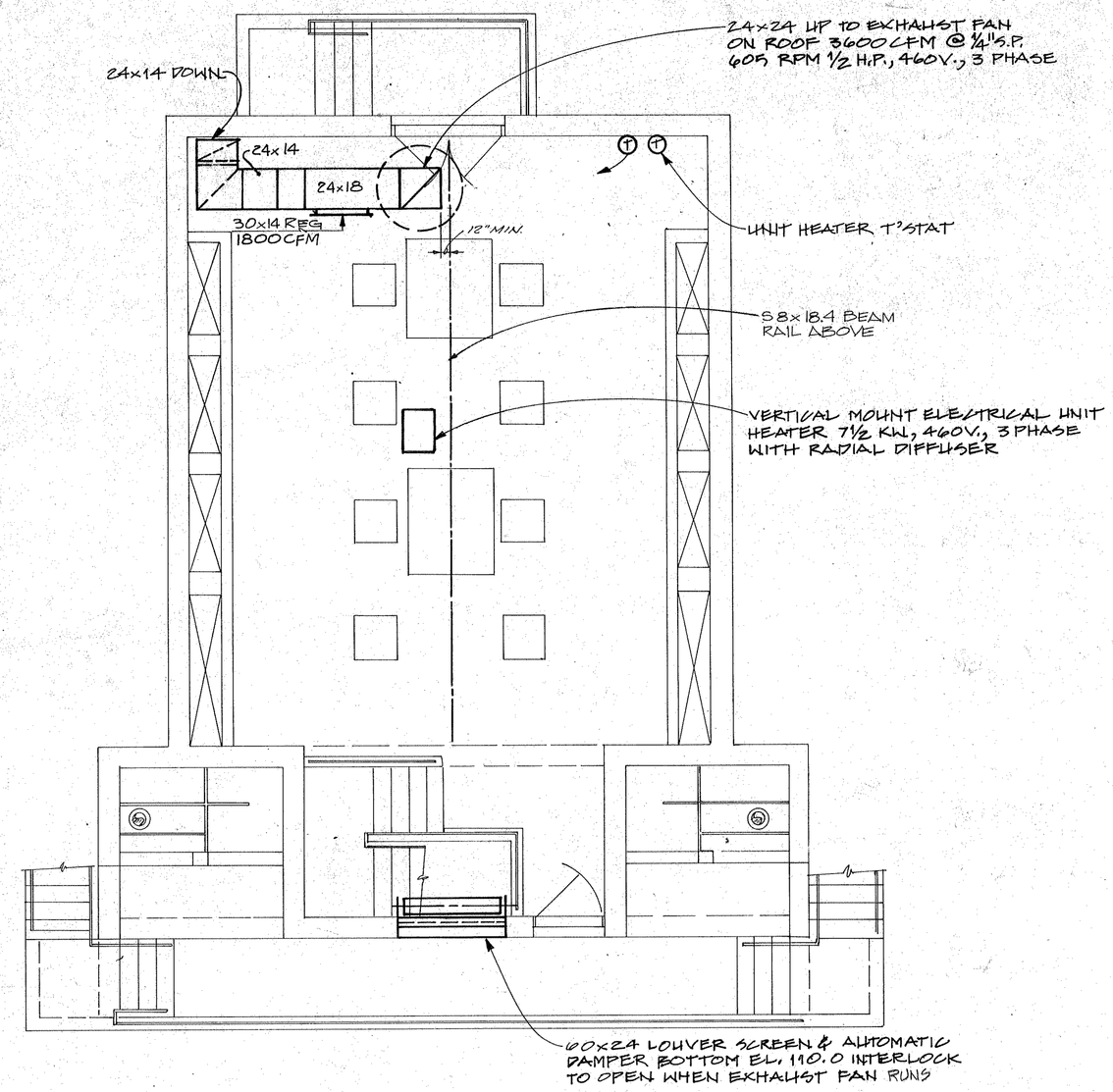

ENTRANCE FLOOR AND MOTOR ROOM PLAN

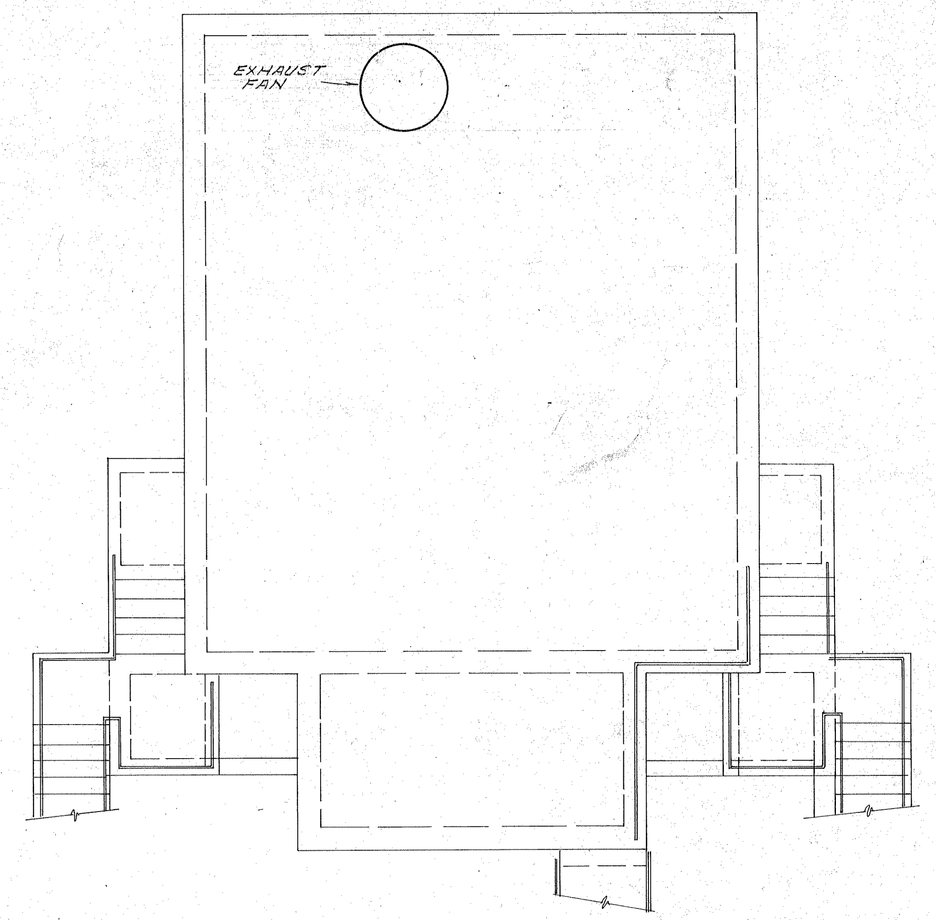

ROOF PLAN

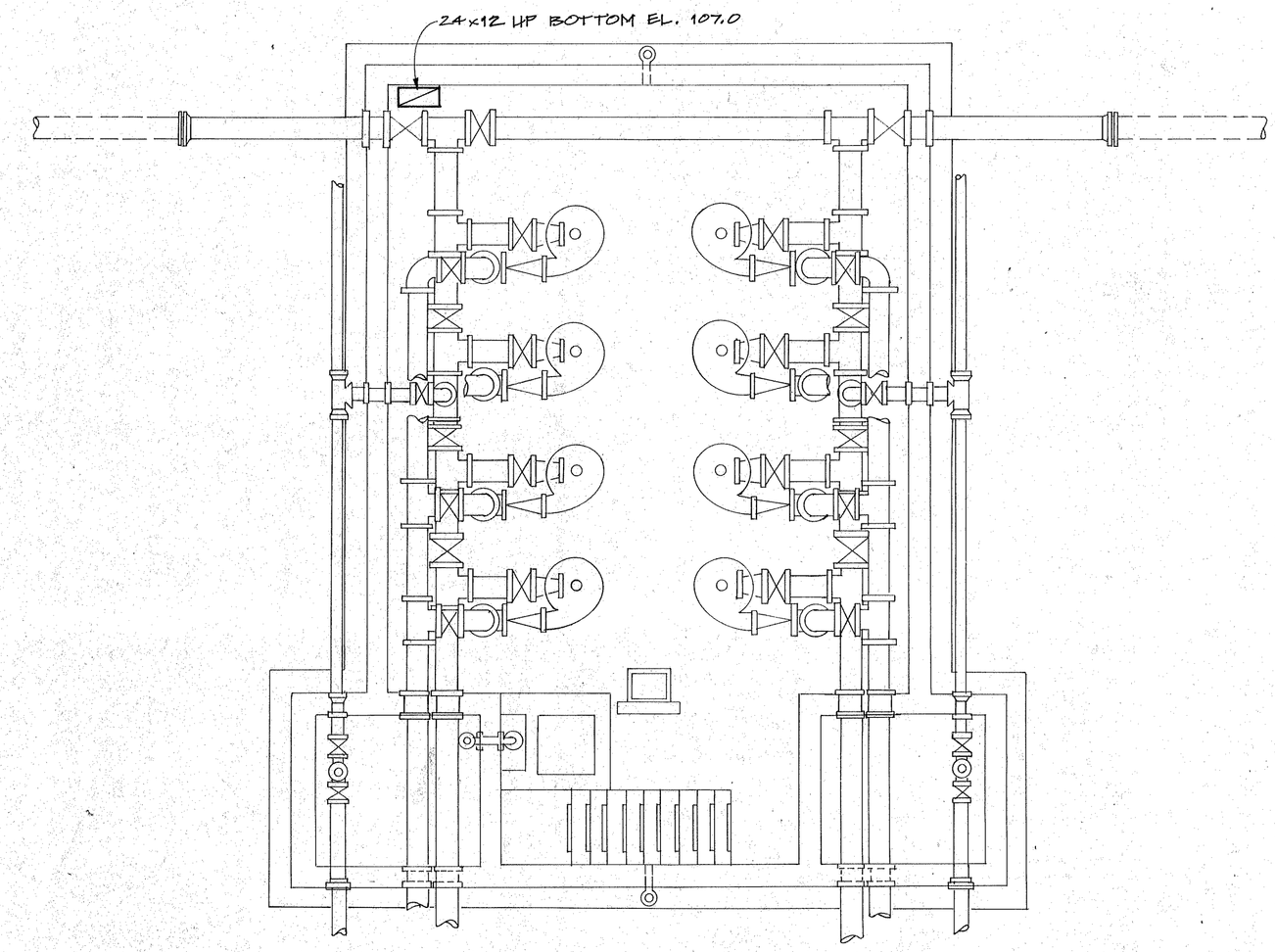

PUMP ROOM PLAN

APPROVED
STATE OF GEORGIA
MAR 15 1984
WATER QUALITY CONTROL SECTION
ENVIRONMENTAL PROTECTION DIVISION
By Carlos E. Eastell Jr.

JACK C. DOZIER P.E.

GEORGIA REGISTERED No. 5021 PROFESSIONAL ENGINEER JOHN H. WIEDEMAN JR.

EPA PROJECT NO. C130409

CITY OF BRUNSWICK, GEORGIA
SEWERAGE SYSTEM IMPROVEMENTS

ACADEMY CREEK PLANT
HVAC
RETURN SLUDGE
PUMPING STATION NO. 1

SCALE	WIEDEMAN AND SINGLETON ENGINEERS	SHEET
1/4"=1'-0"		M-2
DATE	ATLANTA GEORGIA	OF 9
JAN. 1984		

29

69

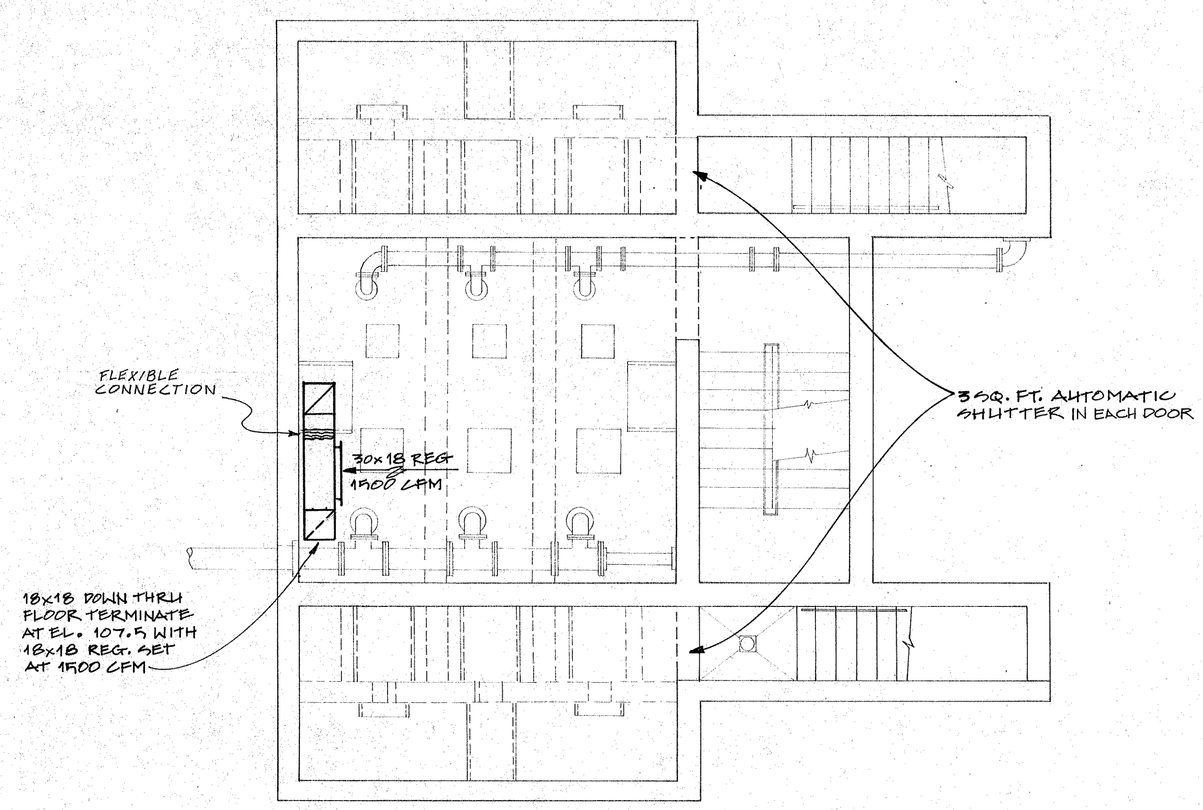

MOTOR FLOOR PLAN EL. 99.00

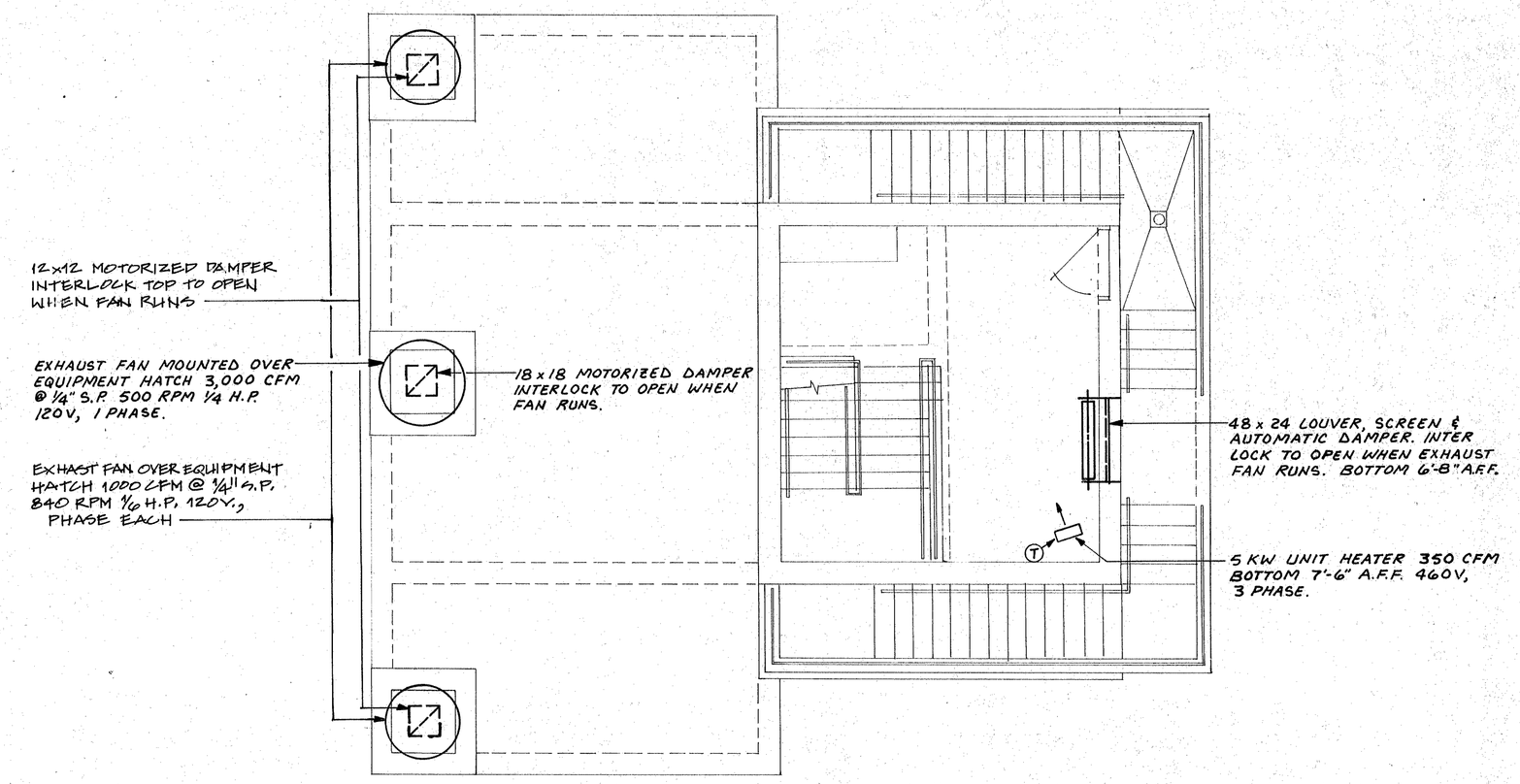

ENTRANCE FLOOR PLAN EL. 111.50

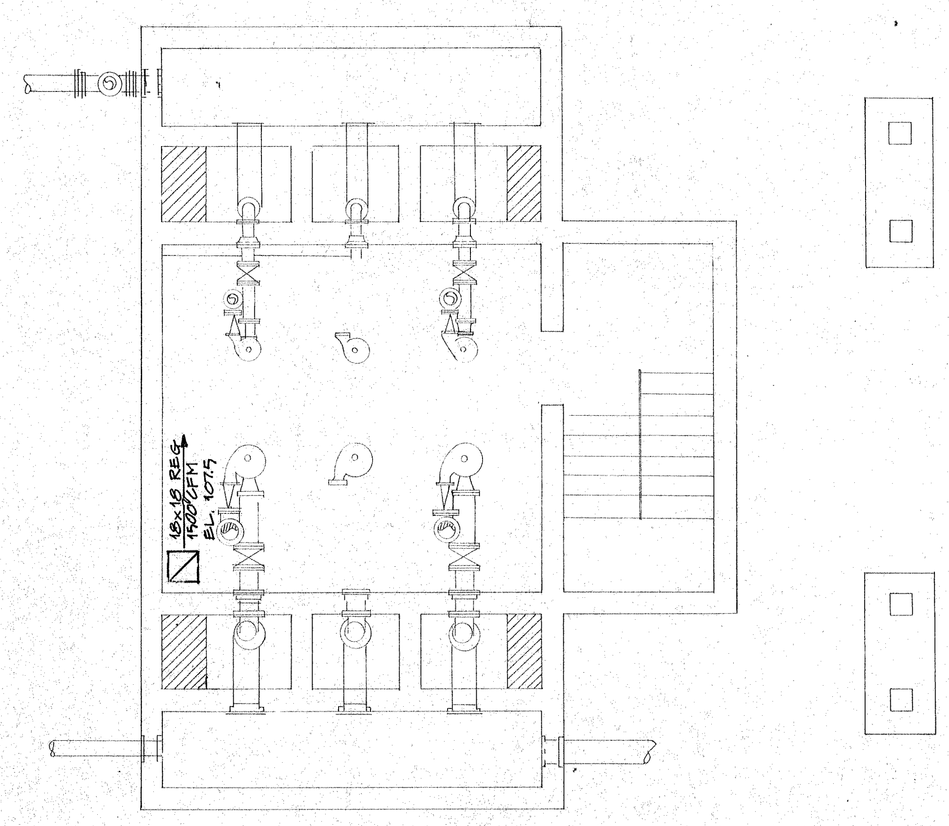

PUMP ROOM PLAN EL. 89.62

GEORGIA REGISTERED No. 5021 PROFESSIONAL ENGINEER JOHN H. WIEDEMAN

EPA PROJECT NO. C130409

APPROVED
STATE OF GEORGIA
MAR 15 1984
WATER QUALITY CONTROL SECTION
ENVIRONMENTAL PROTECTION DIVISION
By Carlos E. Bassell Jr.

JACK C. DOZIER P.E.

CITY OF BRUNSWICK, GEORGIA
SEWERAGE SYSTEM IMPROVEMENTS

ACADEMY CREEK PLANT
HVAC
RECYCLE PUMP STATION

SCALE 1/4"=1'-0"	WIEDEMAN AND SINGLETON ENGINEERS	SHEET M-3
DATE JAN. 1984	ATLANTA GEORGIA	OF 9

30

43

AP 1007804-B

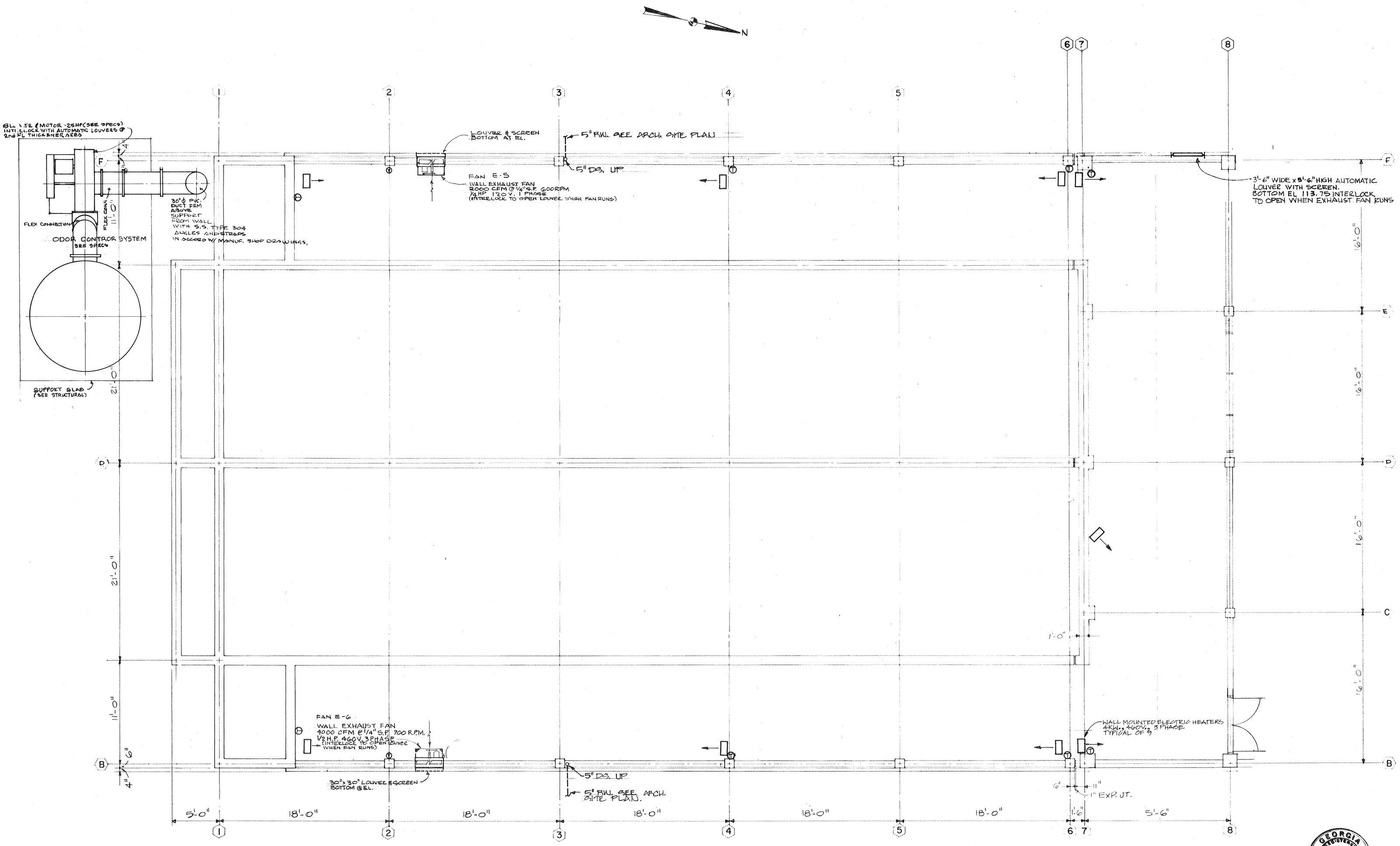

PARTIAL GROUND FLOOR PLAN

1/4" = 1'-0"

GEORGIA REGISTERED No. 5571 PROFESSIONAL ENGINEER JOHN H. WIEDEMAN

EPA PROJECT NO. C130409

APPROVED
STATE OF GEORGIA
MAR 15 1984
WATER QUALITY CONTROL SECTION
ENVIRONMENTAL PROTECTION DIVISION
By Carlos E. Bassell Jr.

JACK C. DOZIER P.E.

CITY OF BRUNSWICK, GEORGIA
SEWERAGE SYSTEM IMPROVEMENTS

ACADEMY CREEK PLANT
HVAC
DEWATERING BUILDING
PARTIAL GROUND FLOOR PLAN

SCALE	WIEDEMAN AND SINGLETON ENGINEERS	SHEET
1/4" = 1'-0"		M-4
DATE	ATLANTA GEORGIA	OF 9
JAN., 1984		

AP 10479A-B

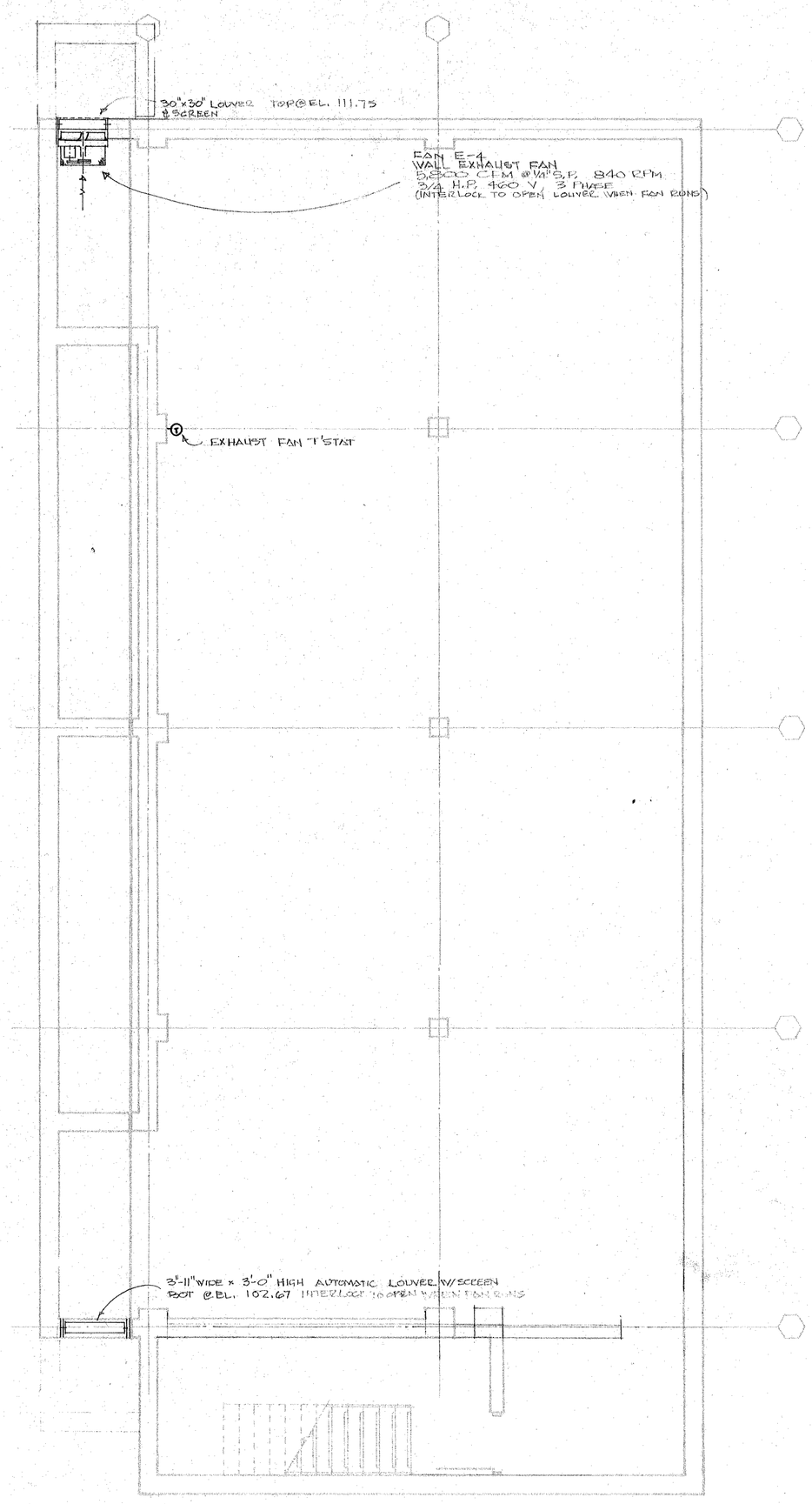

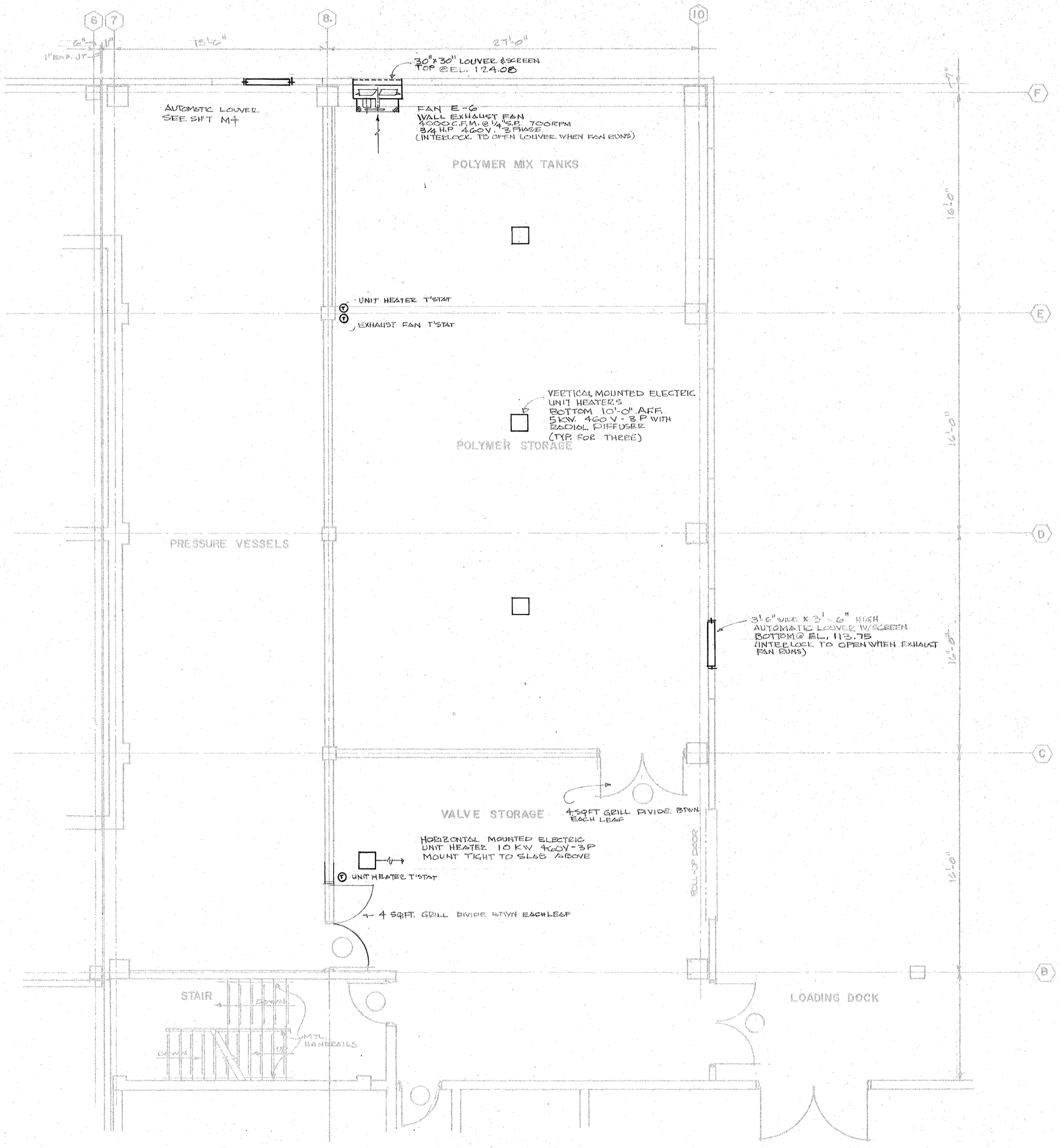

PARTIAL GROUND FLOOR PLAN - DEWATERING
1/4" = 1'-0"

GEORGIA REGISTERED No. 5021 PROFESSIONAL ENGINEER JOHN H. WIEDEMAN

EPA PROJECT NO. C130409

APPROVED
STATE OF GEORGIA
MAR 15 1984
WATER QUALITY CONTROL SECTION
ENVIRONMENTAL PROTECTION DIVISION
By Curtis E. Bissell Jr.

JACK C. DOZIER P.E.

CITY OF BRUNSWICK, GEORGIA
SEWERAGE SYSTEM IMPROVEMENTS

ACADEMY CREEK PLANT
HVAC
DEWATERING-MAINTENANCE BUILDING
PARTIAL LOWER LEVEL PLANS

SCALE	WIEDEMAN AND SINGLETON ENGINEERS	SHEET
AS SHOWN	ATLANTA GEORGIA	M-5
DATE JAN., 1984		OF 9

AF 10478A-B

MECHANICAL NOTES AND SPECIFICATIONS

1...ROOFTOP HEATPUMP AIR CONDITIONING UNIT WITH ELECTRIC COOLING AND ELECTRIC HEATING EQUAL TO LENNOX MODEL CHP11-953, 3000 CFM AT 1.0 SP, 3 HP MOTOR, TOTAL COOLING 93 MBH, SENSIBLE COOLING 68 MBH, HEAT PUMP HEATING 43 MBH AT 15F, AUXILIARY ELECTRIC HEATING 94 MBH AT 460 VOLT (27.5 KW), SEER RATING 7.9. RATINGS AT 95/80/69. PROVIDE FULL SIZED COPPER DRAIN FROM UNIT WITH TRAP, ELBOW DOWN AND DISCHARGE ON SOLID CONCRETE BLOCK.

2...PROVIDE EXHAUST FANS COMPLETE WITH MOTOR OPERATED INTAKE LOUVERS (SIZES AS SHOWN). PROPELLOR WALL FANS SHALL BE EQUIPPED WITH MOTOR OPERATED DISCHARGE SHUTTERS. ROOF EXHAUST FANS SHALL BE PROVIDED WITH MOTOR OPERATED BACK DRAFT DAMPERS.

3...EXHAUST FAN INTAKE LOUVERS-CARNES MODEL L-28, SIZES AS SHOWN, 4 INCH DEEP, OPERATING BLADES SIX INCH ON CENTER, EXTRUDED ALUMINUM, MOTOR OPERATED WITH MOTORS AND SECTIONS AS REQUIRED.

4...EXHAUST FAN E1 & E2-CARNES MODEL LMDA 20, TYPE D FRAME DIRECT DRIVE, 3590 CFM AT 1/8 INCH SP, 1/3 HP-1750 RPM MOTOR. INTERLOCK ONE FAN WITH 24 X 48 MIDDLE LOUVER SECTION AND ONE FAN WITH 24 X 48 TOP LOUVER SECTION. FANS ARE FOR SUMMER OPERATION.

5...EXHAUST FAN E3-CARNES MODEL LMDA 20, TYPE D FRAME DIRECT DRIVE, 1960 CFM AT 1/8 SP, 1/6 HP-1100 RPM MOTOR. INTERLOCK WITH BOTTOM 24 X 24 LOUVER. PROVIDE SPEED CONTROL AND MARK POSITION ON CONTROL FOR 1220 CFM FOR WINTER OPERATION. CONTROL FULL ON FOR SUMMER OPERATION.

6...TOILET EXHAUST FAN-WOMEN-CARNES MODEL VCDB 15, 155 CFM AT 1/8 SP, 110 WATT-1550 RPM MOTOR, COMPLETE WITH AUTOMATIC BACK DRAFT DAMPER, DUCTWORK AND WALL CAP. INTERLOCK WITH TOILET LIGHT SWITCH.

7...TOILET EXHAUST FAN-MEN-CARNES MODEL VCDB 45, 445 CFM AT 1/8 SP, 400 WATT-1050 RPM, COMPLETE AS NOTED ABOVE.

8...ELECTRIC WALL HEATER-EMERSON-CHROMALOX MODEL 2400, 4000 WATTS COMPLETE WITH THERMOSTAT, COMBINATION SUPPLY AND RETURN GRILLE, FAN WITH PERMANENTLY LUBRICATED MOTOR, AUTO RESET THERMAL OVERHEAT PROTECTION, ARRANGED FOR RECESS MOUNTING. INSTALL 12 INCHES ABOVE FLOOR AND 12 INCHES FROM ADJACENT WALL.

9...INSTALL THERMOSTAT, STATUS PANEL, INTERVAL TIMER, ETC., AT LOCATION SHOWN FOR THERMOSTAT.

10...PROVIDE ELBOW TAKEOFFS FROM MAIN DUCT WITH SPLITTERS TO BALANCE AIR. FORTY FIVE DEGREE TAKEOFFS MAY BE USED FOR BRANCH TO AIR DIFFUSERS.

11...PROVIDE CLOTHES DRYER VENT FROM DRYER LOCATION TO TOILET WALL, COMPLETE WITH WALL CAP. PROVIDE METAL CHASE IN WALL FOR DRYER VENT FROM FLOOR TO CEILING WITH REMOVABLE COVER. EXTEND 8 INCH METAL DUCT FROM CONNECTION TO DRYER VENT AT CEILING TO OUTSIDE WALL CAP.

12...PROVIDE TWO PRV PRESSURE REDUCING STATION WITH THREE VALVE BYPASS ON COLD WATER ABOVE CEILING. EACH PRV COMPLETE WITH GATE VALVE AND STRAINER ON INLET AND GATE VALVE ON DISCHARGE. THREE VALVE BYPASS COMPLETE WITH 1 1/4 IN. GLOBE VALVE AND TWO GATE VALVES. PROVIDE PRESSURE GAGE WITH PETCOCK ON INLET AND DISCHARGE OF PRV STATION. SET ONE PRV FOR 45 PSIG AND THE OTHER FOR 55 PSIG.

13...WATER HEATER EQUAL TO RHEEM MODEL 668H-66D WITH TWO 6000 WATT ELEMENTS, TOP AND BOTTOM, 66 GAL., RECOVERY 49 GPH AT 100F RISE. EXTEND FULL SIZE RELIEF VALVE DISCHARGE AS SHOWN, DOWN IN WALL AND DISCHARGE WITH ELBOW DOWN 12 INCHES ABOVE FLOOR.

14...PROVIDE DUCT LINER FOR MINIMUM OF 15 FT. IN SUPPLY DUCT AND LINE ALL OF RETURN DUCT.

15...PROVIDE WASHING MACHINE BOX WITH HOT AND COLD WATER FOR UP CONNECTION AND 2 INCH WASTE CONNECTION, GUY GRAY OR EQUAL.

16...AIR DISTRIBUTION SHALL BE BARBER COLMAN AS FOLLOWS:
CEILING DIFFUSER (CD)-SURFACE TYPE MODEL SFBJ WITH OPPOSED BLADE VOLUME CONTROL AND DEFLECTROL.
CEILING RETURN (RR)-SURFACE TYPE EGGCRATE MODEL TXEV WITH OPPOSED BLADE VOLUME CONTROL.
SUPPLY REGISTER (SR)-MODEL GMAV WITH OPPOSED BLADE VOLUME CONTROL.
RETURN REGISTER (WRR)-MODEL GMRV WITH OPPOSED BLADE VOLUME CONTROL.
FINISH FOR ALL ITEMS OFF WHITE.

17...EXHAUST FAN E4-CARNES MODEL LMDA 24, TYPE H FRAME BELT DRIVE, 5800 CFM AT 1/4 SP, 3/4 HP-840 RPM MOTOR. INTERLOCK WITH MO LOUVERS.

18...EXHAUST FAN E5-CARNES MODEL LMDA 24, TYPE H FRAME BELT DRIVE, 2000 CFM AT 1/4 SP, 1/4 HP-600 RPM MOTOR. INTERLOCK WITH MO LOUVERS.

19...EXHAUST FAN E6-CARNES MODEL LMDA 24, TYPE H FRAME BELT DRIVE, 4000 CFM AT 1/4 SP, 1/2 HP-700 RPM MOTOR. INTERLOCK WITH MO LOUVERS.

20...EXHAUST FAN E8-CARNES MODEL VERA 33, CENTRIFUGAL ROOF BELT DRIVE, 11,600 CFM AT 1/4 SP, 1 HP-675 RPM MOTOR. INTERLOCK WITH MO LOUVERS.

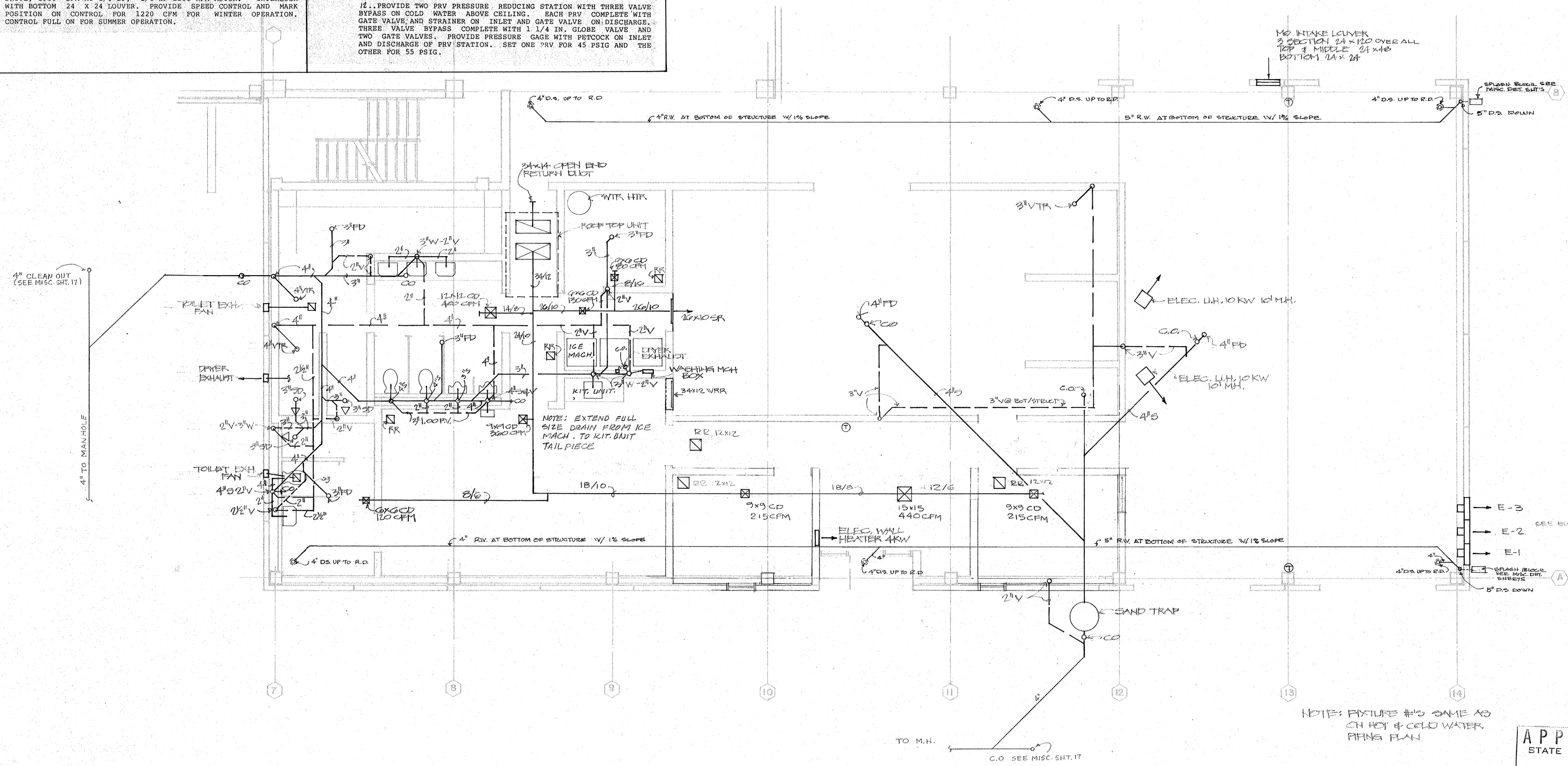

FLOOR PLAN
1/4"=1'-0"

NOTE: PICTURE #15 SAME AS CH HOT & COLD WATER PIPING PLAN

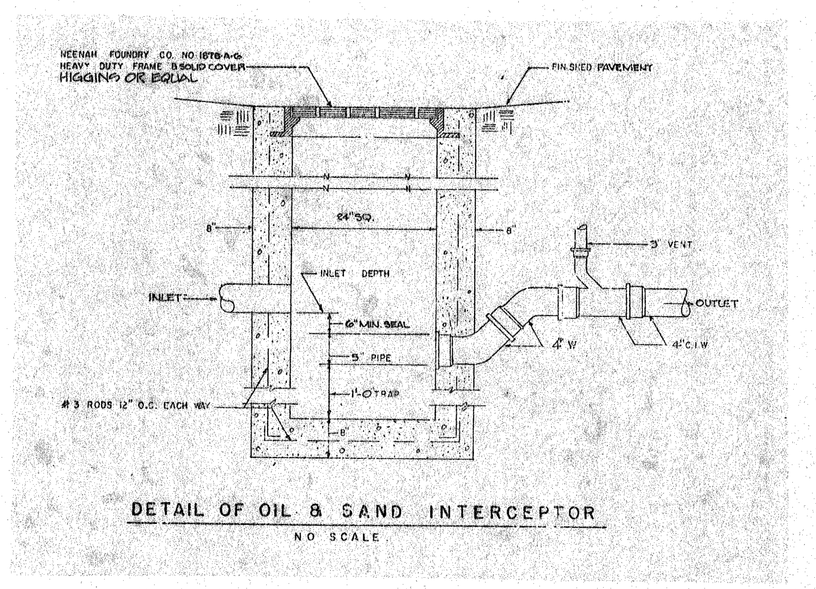

DETAIL OF OIL & SAND INTERCEPTOR
NO SCALE

APPROVED
STATE OF GEORGIA
MAR 15 1984
WATER QUALITY CONTROL SECTION
ENVIRONMENTAL PROTECTION DIVISION
BY Carlos C. Bissell Jr.

JACK C. DOZIER P.E.

GEORGIA REGISTERED No. 5021 PROFESSIONAL ENGINEER JOHN W. WIEDEMAN

EPA PROJECT NO. C130409

CITY OF BRUNSWICK, GEORGIA
SEWERAGE SYSTEM IMPROVEMENTS

ACADEMY CREEK PLANT
PLUMBING
MAINTENANCE BUILDING
GROUND FLOOR PLAN

SCALE	WIEDEMAN AND SINGLETON ENGINEERS	SHEET
AS SHOWN	ATLANTA GEORGIA	M-6
DATE JAN., 1984		OF 9

1. 3/4" AIR DOWN TO 5'-0" A.F.F., SEE DETAIL
2. 5" HUB DRAIN IN BOTTOM OF PIT, PROVIDE ANEENAH #R-4380-1 GRATE IN HUB
3. CARBON-MONOXIDE FLOOR EXHAUST OUTLET, SEE DETAIL
4. CARBON-MONOXIDE EXHAUST STACK, SEE DETAIL
5. 24"ϕ TERRA-COTTA PIPE DRYWELL, FILL WITH CRUSHED STONE. A MIN. OF 3'-0" BELOW INVERT OF INLET PIPE, PROVIDE ANEENAH R-4044-K MANHOLE LID TO FIT OVER PIPE BELL-TOP. SHALL BE FLUSH WITH FINISHED GRADE

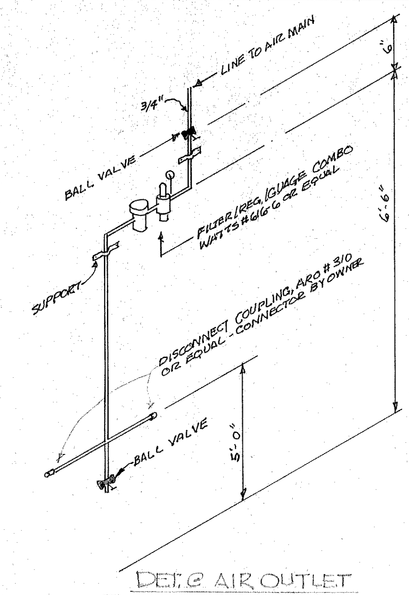

DET. @ AIR OUTLET
NO SCALE

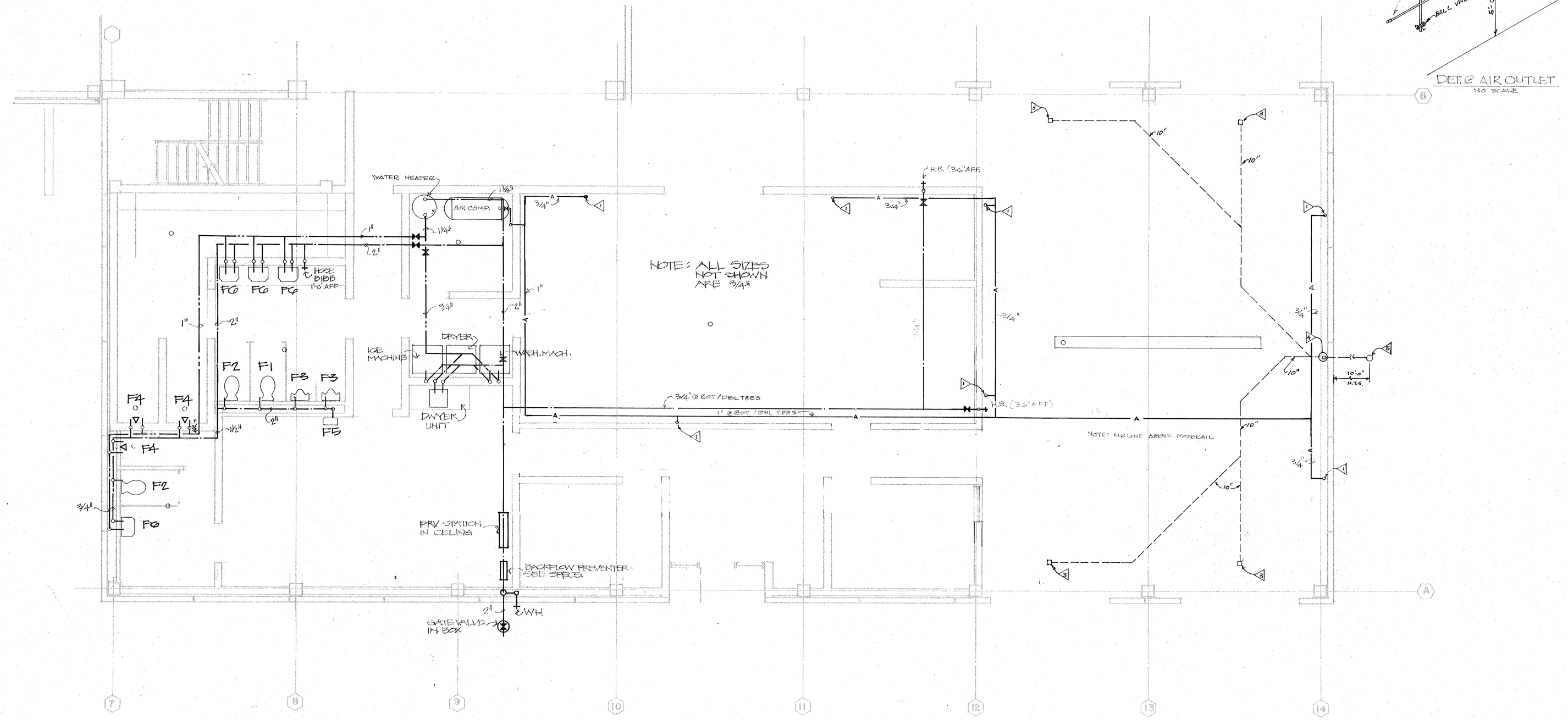

FLOOR PLAN

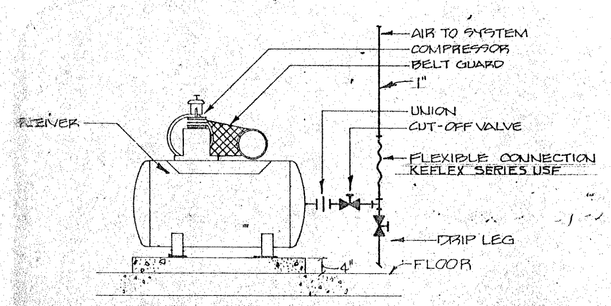

DETAIL OF AIR COMPRESSOR PIPING
NO SCALE

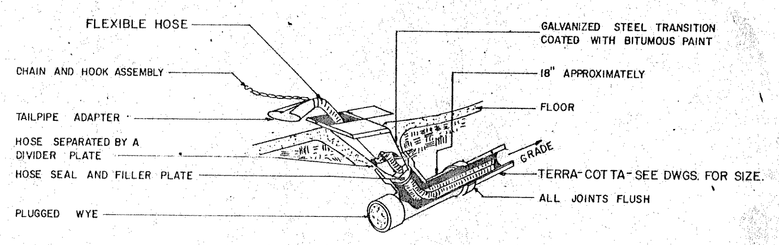

TYPICAL FLOOR FIXTURE

CARBON MONOXIDE EXHAUST SYSTEM DETAIL
NO SCALE

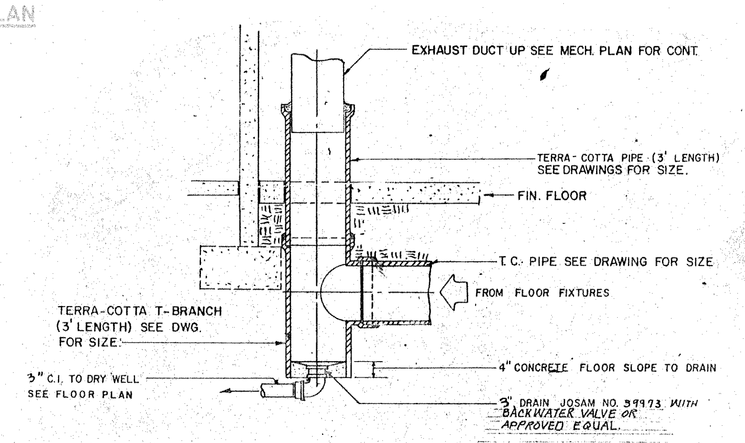

DETAIL OF EXHAUST SYSTEM STACK
NO SCALE

APPROVED
STATE OF GEORGIA
MAR 15 1984
WATER QUALITY CONTROL SECTION
ENVIRONMENTAL PROTECTION DIVISION
By Carlos E. Bassell Jr.

JACK C. DOZIER P.E.

GEORGIA REGISTERED PROFESSIONAL ENGINEER No. 6031 JOHN H. WIEDEMAN

EPA PROJECT NO. C130409

CITY OF BRUNSWICK, GEORGIA
SEWERAGE SYSTEM IMPROVEMENTS

ACADEMY CREEK PLANT
PLUMBING
MAINTENANCE BUILDING
GROUND FLOOR PLAN

SCALE	WIEDEMAN AND SINGLETON ENGINEERS	SHEET
AS SHOWN	ATLANTA GEORGIA	M-7
DATE JAN., 1984		OF 9

AF 10478A-B

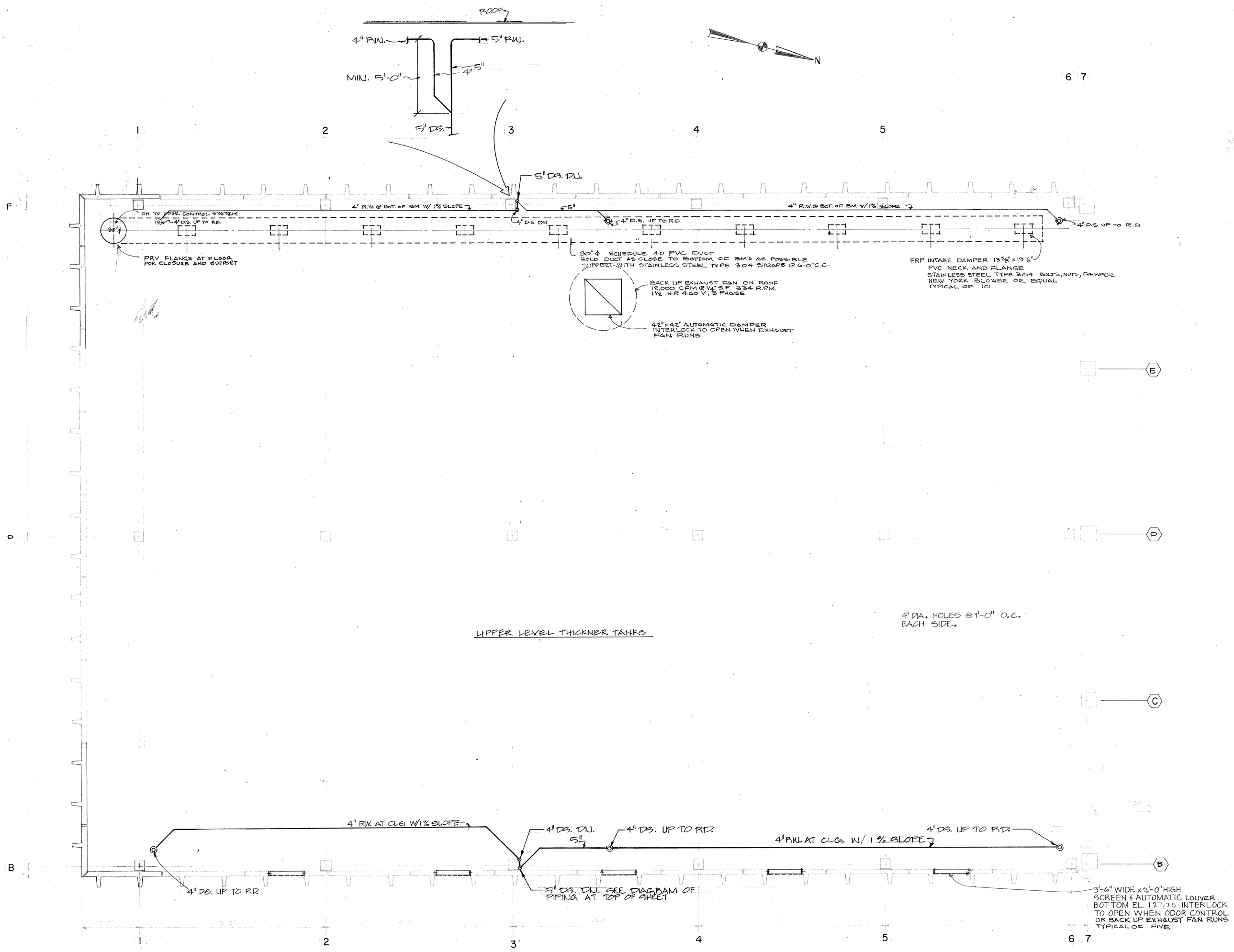

UPPER LEVEL THICKNER TANKS

PARTIAL SECOND FLOOR PLAN
1/4" = 1'-0"

APPROVED
STATE OF GEORGIA
MAR 15 1984
WATER QUALITY CONTROL SECTION
ENVIRONMENTAL PROTECTION DIVISION
By Carlos E. Crandell Jr.

JACK C. DOZIER P.E.

GEORGIA REGISTERED ENGINEERS No. 8001 PROFESSIONAL JOHN N. WIEDEMAN

EPA PROJECT NO. C130409

CITY OF BRUNSWICK, GEORGIA
SEWERAGE SYSTEM IMPROVEMENTS

ACADEMY CREEK PLANT
HVAC
DEWATERING BUILDING
PARTIAL SECOND FLOOR PLAN

SCALE	WIEDEMAN AND SINGLETON ENGINEERS	SHEET
1/4"=1'-0"		M-8
DATE	ATLANTA GEORGIA	OF 9
JAN., 1984		

72

118

AF 10479A-B

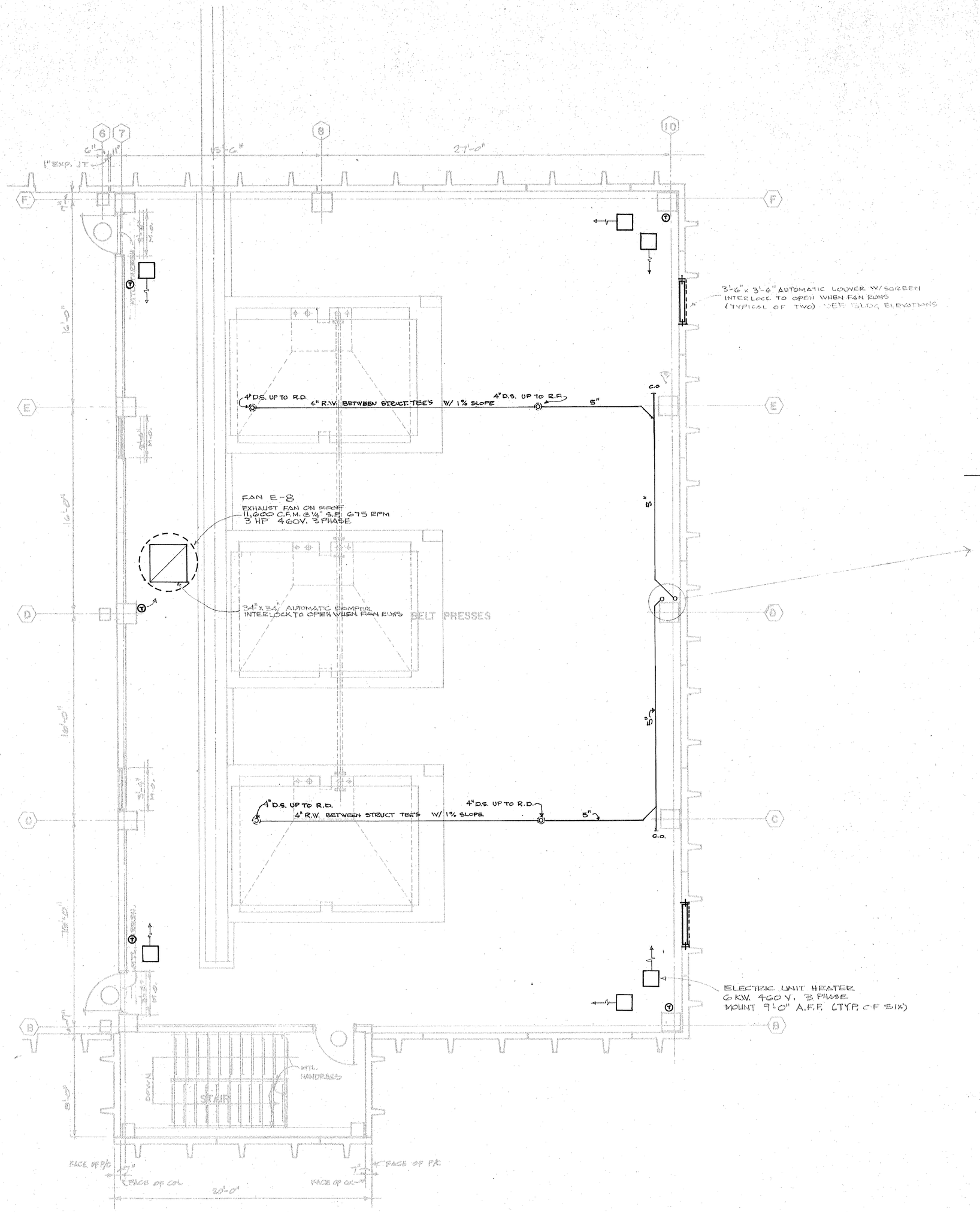

PARTIAL PLAN - DEWATERING
1/4"=1'-0"

APPROVED
STATE OF GEORGIA
MAR 15 1984
WATER QUALITY CONTROL SECTION
ENVIRONMENTAL PROTECTION DIVISION
By Charles C. Bardell Jr.

JACK C. DOZIER P.E.

GEORGIA REGISTERED No. 5021 PROFESSIONAL ENGINEER JOHN H. WIEDEMAN

EPA PROJECT NO. C130409

CITY OF BRUNSWICK, GEORGIA
SEWERAGE SYSTEM IMPROVEMENTS

ACADEMY CREEK PLANT
HVAC
DEWATERING-MAINTENANCE BUILDING
PARTIAL SECOND FLOOR PLAN

SCALE	WIEDEMAN AND SINGLETON ENGINEERS	SHEET
AS SHOWN	ATLANTA GEORGIA	M-9
DATE JAN., 1984		OF 9

73